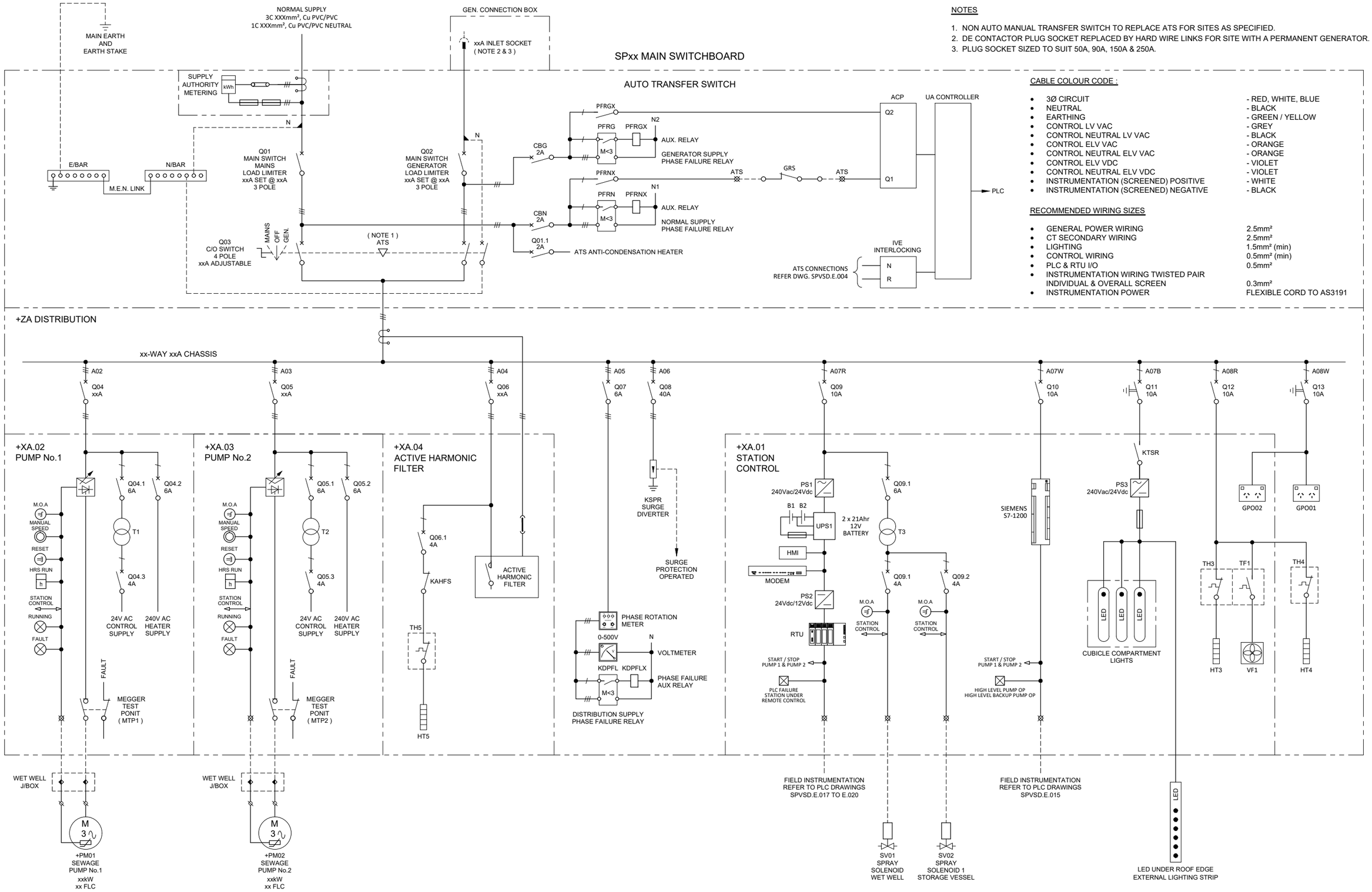

NOTES

1. NON AUTO MANUAL TRANSFER SWITCH TO REPLACE ATS FOR SITES AS SPECIFIED.
2. DE CONTACTOR PLUG SOCKET REPLACED BY HARD WIRE LINKS FOR SITE WITH A PERMANENT GENERATOR.
3. PLUG SOCKET SIZED TO SUIT 50A, 90A, 150A & 250A.

CABLE COLOUR CODE :

• 3Ø CIRCUIT	- RED, WHITE, BLUE
• NEUTRAL	- BLACK
• EARTHING	- GREEN / YELLOW
• CONTROL LV VAC	- GREY
• CONTROL NEUTRAL LV VAC	- BLACK
• CONTROL ELV VAC	- ORANGE
• CONTROL NEUTRAL ELV VAC	- ORANGE
• CONTROL ELV VDC	- VIOLET
• CONTROL NEUTRAL ELV VDC	- VIOLET
• INSTRUMENTATION (SCREENED) POSITIVE	- WHITE
• INSTRUMENTATION (SCREENED) NEGATIVE	- BLACK

RECOMMENDED WIRING SIZES

• GENERAL POWER WIRING	2.5mm²
• CT SECONDARY WIRING	2.5mm²
• LIGHTING	1.5mm² (min)
• CONTROL WIRING	0.5mm² (min)
• PLC & RTU I/O	0.5mm²
• INSTRUMENTATION WIRING TWISTED PAIR INDIVIDUAL & OVERALL SCREEN	0.3mm²
• INSTRUMENTATION POWER	FLEXIBLE CORD TO AS3191

REV	DESCRIPTION	JOB No	DRAFTER	DES. REVIEW	PM. APP'D	DATE
0	REDRAW 2022		M.L.			15.03.22

VENDOR DRAWING No:

DESIGNER	DRAFTER M.LIM 2022	SEW PROJECT MANAGER
DESIGN REVIEW	DRAFT CHECK	ASSET/ENG. MANAGER
APPROVED		

COPYRIGHT
"THIS DOCUMENT IS AND SHALL REMAIN THE PROPERTY OF SOUTH EAST WATER. THIS DOCUMENT MAY ONLY BE USED FOR THE PURPOSE FOR WHICH IT WAS COMMISSIONED AND IN ACCORDANCE WITH THE TERMS OF ENGAGEMENT FOR THE COMMISSION. THIS DESIGN SHOULD NOT BE COPIED OR AMENDED WITHOUT WRITTEN PERMISSION FROM SOUTH EAST WATER. UNAUTHORISED USE OF THIS DOCUMENT IN ANY WAY IS PROHIBITED." ©

South East Water
101 Wells Street, Frankston, VIC 3199 W : www.sew.com.au
T : 61 3 9552 3000 F : 61 3 9552 3001 E : info@sew.com.au

SEWER PUMP STATION
DESIGN DRAWINGS STANDARDS
VARIABLE SPEED DRIVE (VSD) OPERATION
SINGLE LINE DIAGRAM (SHEET 1 OF 2)

DATUM:
MELWAY REF:
SCALE:
SHEET SIZE: A1
SEW DRAWING NUMBER
SPVSD.E.001
0
SEW JOB No:
REV

CAD FILE NAME: X:\DRAWN~1\03-ELE~1\2-MECH~1\02-INF~1\TYPICA~1\ELECTR~1\02-VAR~1\ SPVSD.E.001 - Variable Speed Drive Operation Single Line Diagram 1 of 2.dwg

Plotted @ 06/10/2022 12:51pm by mlim

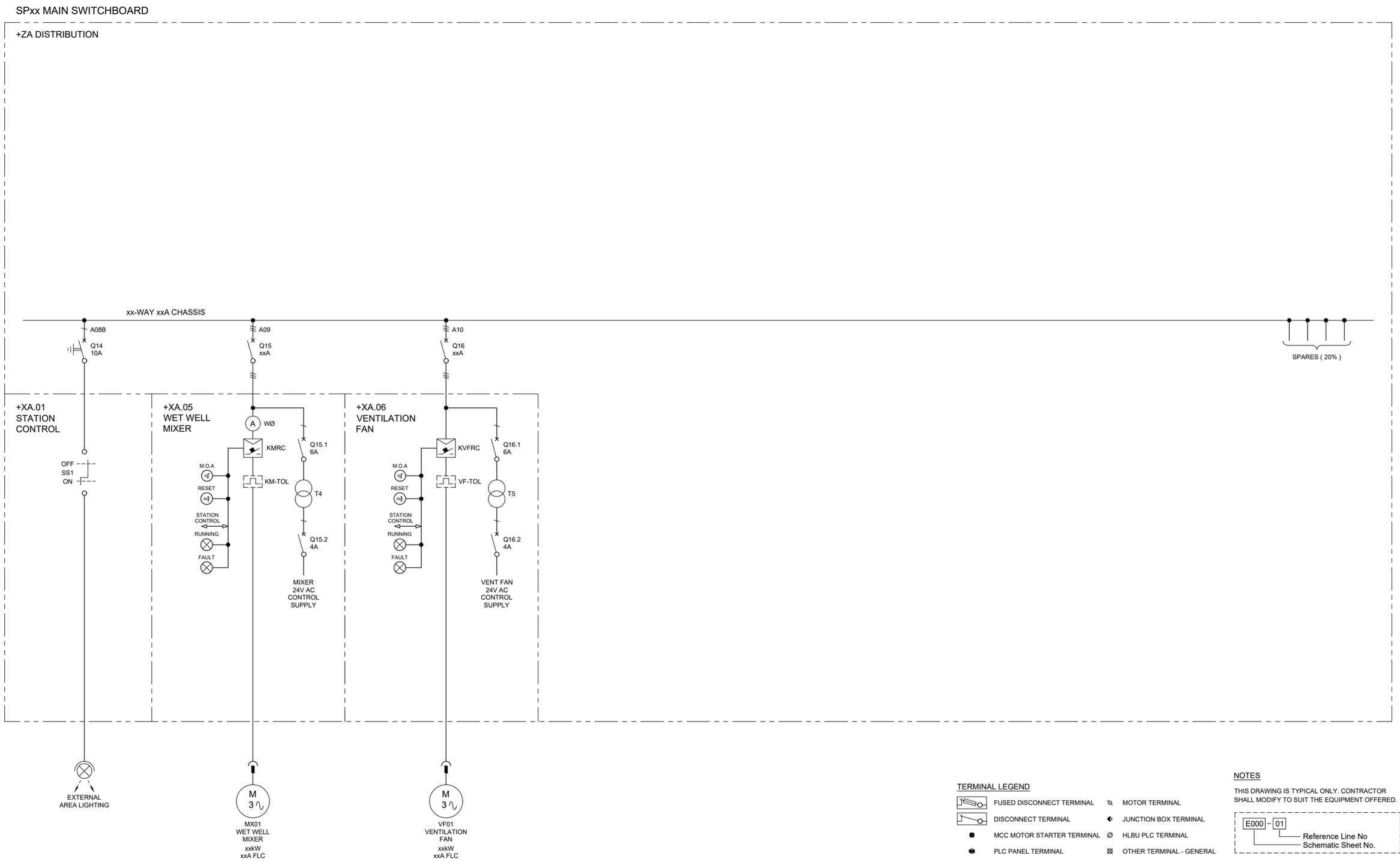

TERMINAL LEGEND

- FUSED DISCONNECT TERMINAL
- DISCONNECT TERMINAL
- MCC MOTOR STARTER TERMINAL
- PLC PANEL TERMINAL
- MOTOR TERMINAL
- JUNCTION BOX TERMINAL
- HLBU PLC TERMINAL
- OTHER TERMINAL - GENERAL

NOTES

THIS DRAWING IS TYPICAL ONLY. CONTRACTOR SHALL MODIFY TO SUIT THE EQUIPMENT OFFERED.

E000 - 01
Reference Line No
Schematic Sheet No.

REV	DESCRIPTION	JOB No	DRAFTER	DES. REVIEW	PM. APP'D	DATE
0	REDRAW 2022		M.L.			15.03.22

VENDOR DRAWING No:

DESIGNER	DRAFTER M.LIM 2022	SEW PROJECT MANAGER
DESIGN REVIEW	DRAFT CHECK	ASSET/ENG. MANAGER
APPROVED		

COPYRIGHT
"THIS DOCUMENT IS AND SHALL REMAIN THE PROPERTY OF SOUTH EAST WATER. THIS DOCUMENT MAY ONLY BE USED FOR THE PURPOSE FOR WHICH IT WAS COMMISSIONED AND IN ACCORDANCE WITH THE TERMS OF ENGAGEMENT FOR THE COMMISSION. THIS DESIGN SHOULD NOT BE COPIED OR AMENDED WITHOUT WRITTEN PERMISSION FROM SOUTH EAST WATER. UNAUTHORISED USE OF THIS DOCUMENT IN ANY WAY IS PROHIBITED."©

South East Water
101 Wells Street, Frankston, VIC 3199 W : www.sew.com.au
T : 61 3 9552 3000 F : 61 3 9552 3001 E : info@sew.com.au

SEWER PUMP STATION
DESIGN DRAWINGS STANDARDS
VARIABLE SPEED DRIVE (VSD) OPERATION
SINGLE LINE DIAGRAM (SHEET 2 OF 2)

DATUM:
MELWAY REF:
SCALE:
SHEET SIZE: A1
SEW DRAWING NUMBER
SPVSD.E.002
0
SEW JOB No:
REV

CAD FILE NAME: C:\Michael's Backup\1%. SP Sewer Pump Station\2022 Sewer Pump Station Electrical Standard drawings\Variable Speed Drive Operation 2022 Electrical Standards Drawings\ SPVSDE.002 - Variable Speed Drive Operation Single Line Diagram 2 of 2.dwg
Plotted @ 05/9/2022 11:58am by mlim

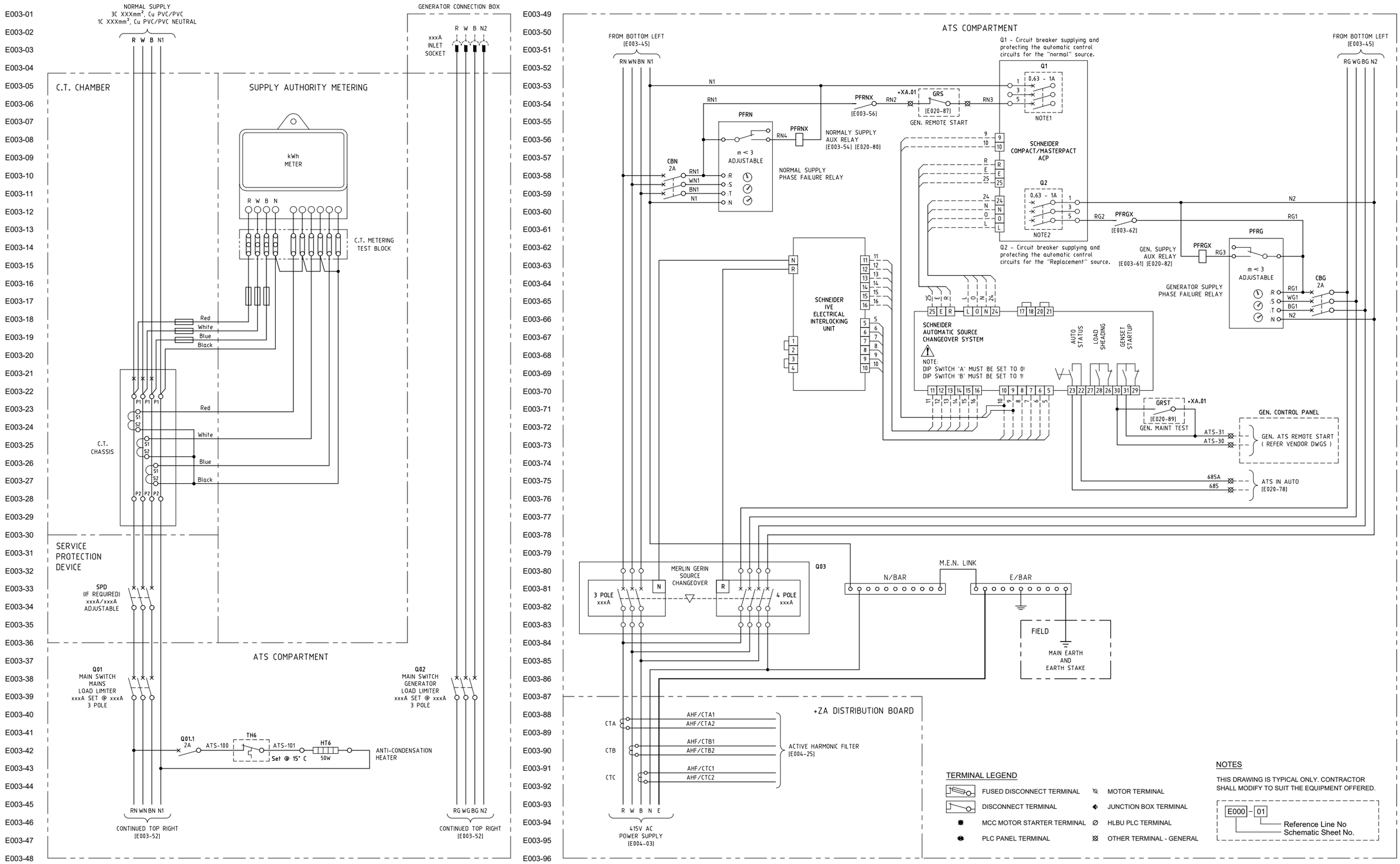

REV	DESCRIPTION	JOB No	DRAFTER	DES. REVIEW	PM. APP'D	DATE
0	REDRAW 2022		M.L.			15.03.22

VENDOR DRAWING No:

DESIGNER	DRAFTER M.LIM 2022	SEW PROJECT MANAGER
DESIGN REVIEW	DRAFT CHECK	ASSET/ENG. MANAGER
APPROVED		

COPYRIGHT
"THIS DOCUMENT IS AND SHALL REMAIN THE PROPERTY OF SOUTH EAST WATER. THIS DOCUMENT MAY ONLY BE USED FOR THE PURPOSE FOR WHICH IT WAS COMMISSIONED AND IN ACCORDANCE WITH THE TERMS OF ENGAGEMENT FOR THE COMMISSION. THIS DESIGN SHOULD NOT BE COPIED OR AMENDED WITHOUT WRITTEN PERMISSION FROM SOUTH EAST WATER. UNAUTHORISED USE OF THIS DOCUMENT IN ANY WAY IS PROHIBITED."©

South East Water
101 Wells Street, Frankston, VIC 3199 W : www.sew.com.au
T : 61 3 9552 3000 F : 61 3 9552 3001 E : info@sew.com.au

SEWER PUMP STATION
DESIGN DRAWINGS STANDARDS
GENERATOR AUTOMATIC TRANSFER SWITCH
SCHEMATIC DIAGRAM

DATUM:
MELWAY REF:
SCALE:
SHEET SIZE: A1
SEW DRAWING NUMBER
SPVSD.E.003
0
SEW JOB No:
REV

CAD FILE NAME: X:\DRAWIN~1\03-ELE~1\2-MECH~1\02-INF~1\TYPICA~1\ELECTR~1\02-VAR~1\SPVSDE003 - Generator Auto Transfer Switch Schematic Diagram.dwg

Plotted @ 19/10/2022 6:42am by mlim

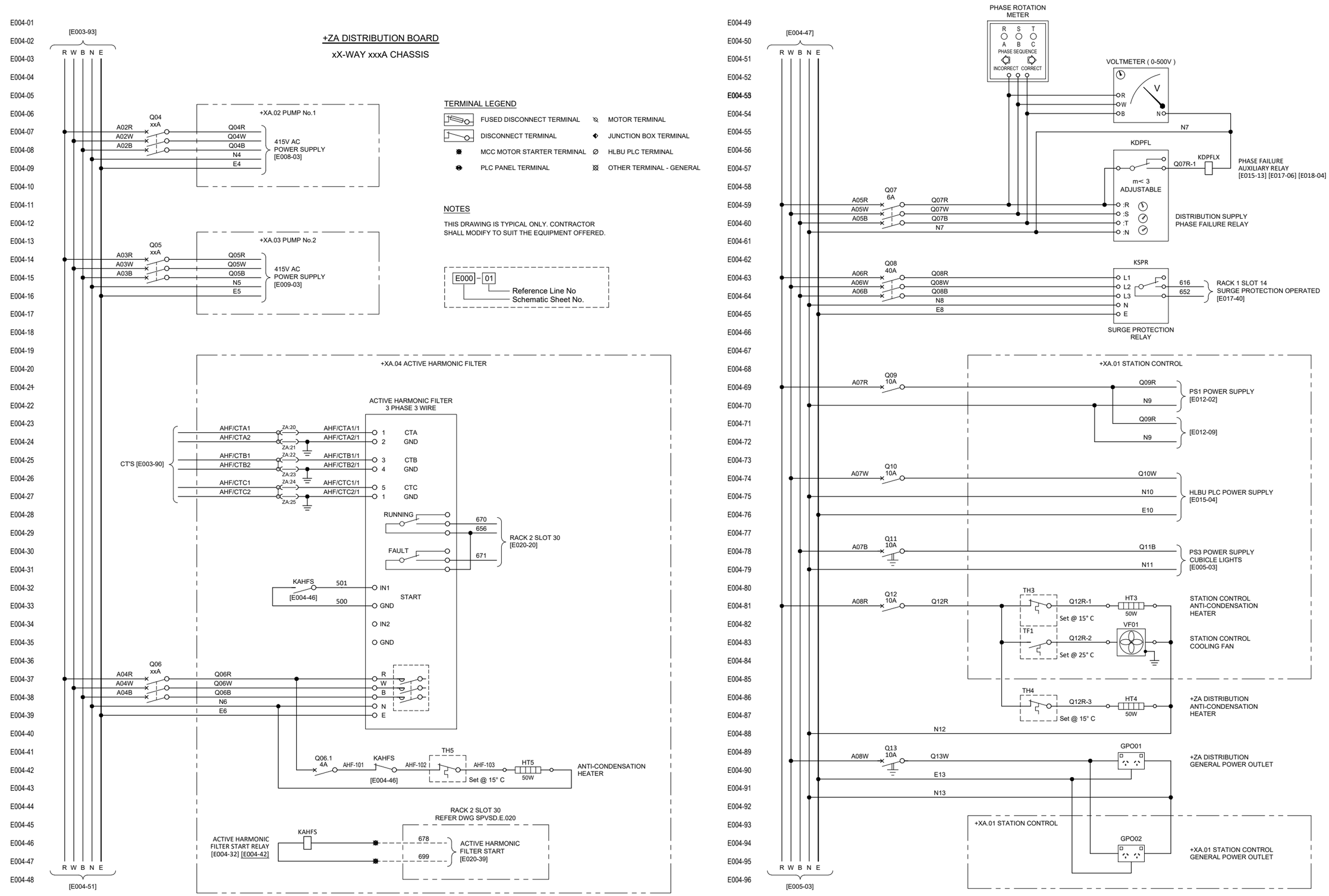

REV	DESCRIPTION	JOB No	DRAFTER	DES. REVIEW	PM. APP'D	DATE
0	REDRAW 2022		M.L.			15.03.22

VENDOR DRAWING No:

DESIGNER	DRAFTER	SEW PROJECT MANAGER
	M.LIM 2022	
DESIGN REVIEW	DRAFT CHECK	ASSET/ENG. MANAGER
APPROVED		

COPYRIGHT
"THIS DOCUMENT IS AND SHALL REMAIN THE PROPERTY OF SOUTH EAST WATER. THIS DOCUMENT MAY ONLY BE USED FOR THE PURPOSE FOR WHICH IT WAS COMMISSIONED AND IN ACCORDANCE WITH THE TERMS OF ENGAGEMENT FOR THE COMMISSION. THIS DESIGN SHOULD NOT BE COPIED OR AMENDED WITHOUT WRITTEN PERMISSION FROM SOUTH EAST WATER. UNAUTHORISED USE OF THIS DOCUMENT IN ANY WAY IS PROHIBITED."

South East Water
101 Wells Street, Frankston, VIC 3199 W : www.sew.com.au
T : 61 3 9552 3000 F : 61 3 9552 3001 E : info@sew.com.au

SEWER PUMP STATION DESIGN DRAWINGS STANDARDS
+ZA POWER DISTRIBUTION SCHEMATIC DIAGRAM (SHEET 1 OF 2)

DATUM:
MELWAY REF:
SCALE:
SHEET SIZE: A1
SEW DRAWING NUMBER
SPVSD.E.004
0
REV
SEW JOB No:

CAD FILE NAME: X:\DRAWIN~1\93-ELE~1\2-MECH~1\02-INF~1\TYPICA~1\ELECTR~1\02-VAR~1\ SPVSDE 004 - +ZA Power Distribution Schematic Diagram 1 of 2.dwg

Plotted @ 19/10/2022 6:41am by mlim

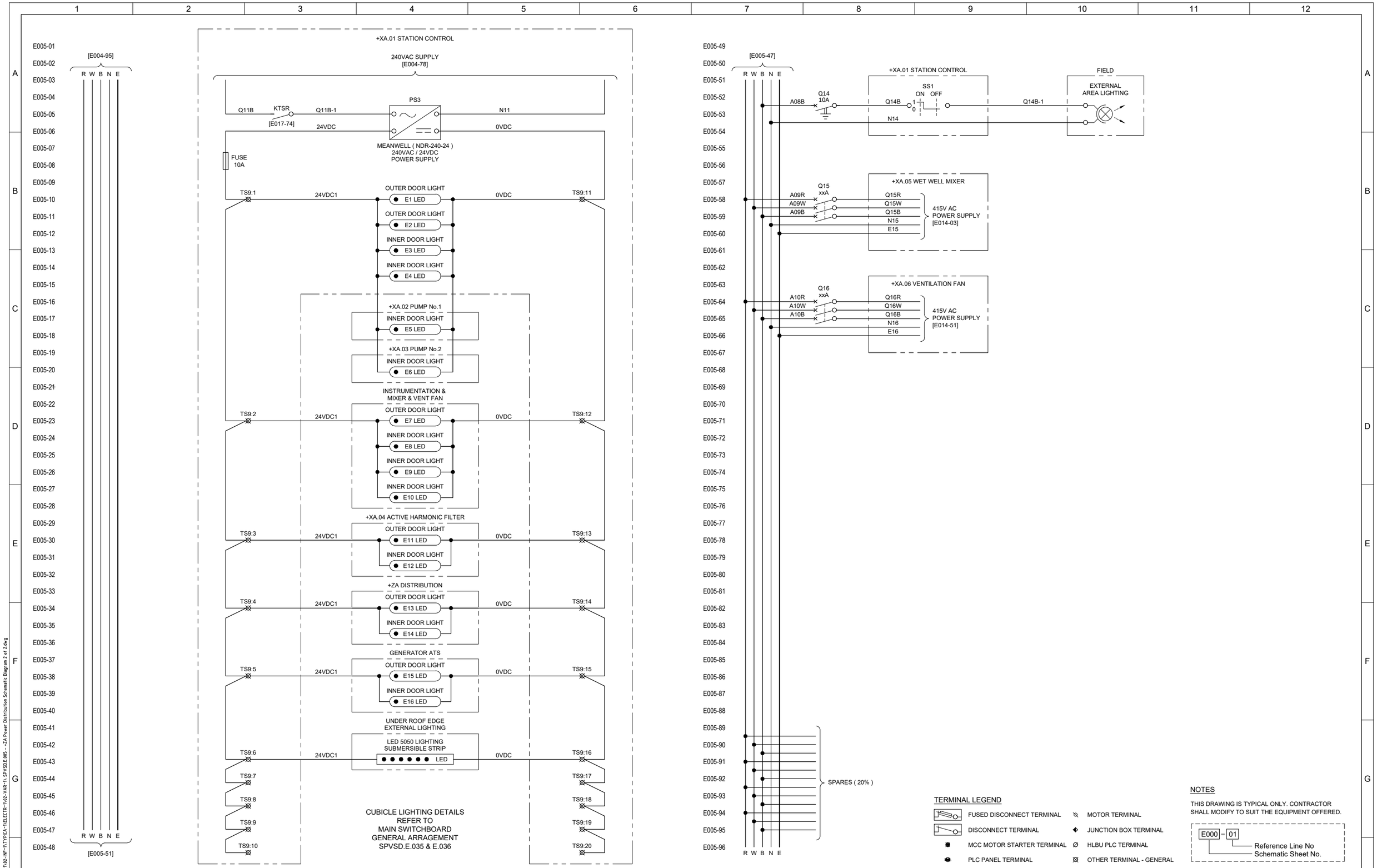

REV	DESCRIPTION	JOB No	DRAFTER	DES. REVIEW	PM. APP'D	DATE
0	REDRAW 2022		M.L.			15.03.22

VENDOR DRAWING No:

DESIGNER	DRAFTER M.LIM 2022	SEW PROJECT MANAGER
DESIGN REVIEW	DRAFT CHECK	ASSET/ENG. MANAGER
APPROVED		

COPYRIGHT
"THIS DOCUMENT IS AND SHALL REMAIN THE PROPERTY OF SOUTH EAST WATER. THIS DOCUMENT MAY ONLY BE USED FOR THE PURPOSE FOR WHICH IT WAS COMMISSIONED AND IN ACCORDANCE WITH THE TERMS OF ENGAGEMENT FOR THE COMMISSION. THIS DESIGN SHOULD NOT BE COPIED OR AMENDED WITHOUT WRITTEN PERMISSION FROM SOUTH EAST WATER. UNAUTHORISED USE OF THIS DOCUMENT IN ANY WAY IS PROHIBITED."©

South East Water
101 Wells Street, Frankston, VIC 3199 W : www.sew.com.au
T : 61 3 9552 3000 F : 61 3 9552 3001 E : info@sew.com.au

SEWER PUMP STATION
DESIGN DRAWINGS STANDARDS
+ZA POWER DISTRIBUTION
SCHEMATIC DIAGRAM (SHEET 2 OF 2)

DATUM:
MELWAY REF:
SCALE:
SHEET SIZE: A1
SEW DRAWING NUMBER
SPVSD.E.005
SEW JOB No:
REV 0

CAD FILE NAME: X:\DRAWIN~1\93-ELE~1\2-MECH~1\02-INF~1\TYPICA~1\ELECTR~1\02-VAR~1\ SPVSDE095 - +ZA Power Distribution Schematic Diagram 2 of 2.dwg
Plotted @ 19/10/2022 6:41am by mlim

E006-01
E006-02
E006-03
E006-04
E006-05
E006-06
E006-07
E006-08
E006-09
E006-10
E006-11
E006-12
E006-13
E006-14
E006-15
E006-16
E006-17
E006-18
E006-19
E006-20
E006-21
E006-22
E006-23
E006-24
E006-25
E006-26
E006-27
E006-28
E006-29
E006-30
E006-31
E006-32
E006-33
E006-34
E006-35
E006-36
E006-37
E006-38
E006-39
E006-40
E006-41
E006-42
E006-43
E006-44
E006-45
E006-46
E006-47
E006-48

This sheet intentionally blank

E006-49
E006-50
E006-51
E006-52
E006-53
E006-54
E006-55
E006-56
E006-57
E006-58
E006-59
E006-60
E006-61
E006-62
E006-63
E006-64
E006-65
E006-66
E006-67
E006-68
E006-69
E006-70
E006-71
E006-72
E006-73
E006-74
E006-75
E006-76
E006-77
E006-78
E006-79
E006-80
E006-81
E006-82
E006-83
E006-84
E006-85
E006-86
E006-87
E006-88
E006-89
E006-90
E006-91
E006-92
E006-93
E006-94
E006-95
E006-96

REV	DESCRIPTION	JOB No	DRAFTER	DES. REVIEW	PM. APP'D	DATE
0	REDRAW 2022		M.L.			15.03.22

VENDOR DRAWING No:

DESIGNER
DRAFTER M.LIM 2022
SEW PROJECT MANAGER
DESIGN REVIEW
DRAFT CHECK
ASSET/ENG. MANAGER
APPROVED

COPYRIGHT
"THIS DOCUMENT IS AND SHALL REMAIN THE PROPERTY OF SOUTH EAST WATER. THIS DOCUMENT MAY ONLY BE USED FOR THE PURPOSE FOR WHICH IT WAS COMMISSIONED AND IN ACCORDANCE WITH THE TERMS OF ENGAGEMENT FOR THE COMMISSION. THIS DESIGN SHOULD NOT BE COPIED OR AMENDED WITHOUT WRITTEN PERMISSION FROM SOUTH EAST WATER. UNAUTHORISED USE OF THIS DOCUMENT IN ANY WAY IS PROHIBITED."©

South East Water
101 Wells Street, Frankston, VIC 3199 W : www.sew.com.au
T : 61 3 9552 3000 F : 61 3 9552 3001 E : info@sew.com.au

SEWER PUMP STATION
DESIGN DRAWINGS STANDARDS
BLANK

DATUM:
MELWAY REF:
SCALE:
SHEET SIZE: A1
SEW DRAWING NUMBER
SPVSD.E.006
0
SEW JOB No:
REV

CAD FILE NAME: C:\Michael's Backup\1. SP Sewer Pump Station\2022 Sewer Pump Station Electrical Standard drawings\Variable Speed Drive Operation 2022 Electrical Standards Drawings\ SPVSD.E.006 - Blank.dwg
Plotted @ 05/9/2022 11:58am by mlim

E007-01
E007-02
E007-03
E007-04
E007-05
E007-06
E007-07
E007-08
E007-09
E007-10
E007-11
E007-12
E007-13
E007-14
E007-15
E007-16
E007-17
E007-18
E007-19
E007-20
E007-21
E007-22
E007-23
E007-24
E007-25
E007-26
E007-27
E007-28
E007-29
E007-30
E007-31
E007-32
E007-33
E007-34
E007-35
E007-36
E007-37
E007-38
E007-39
E007-40
E007-41
E007-42
E007-43
E007-44
E007-45
E007-46
E007-47
E007-48
E007-49
E007-50
E007-51
E007-52
E007-53
E007-54
E007-55
E007-56
E007-57
E007-58
E007-59
E007-60
E007-61
E007-62
E007-63
E007-64
E007-65
E007-66
E007-67
E007-68
E007-69
E007-70
E007-71
E007-72
E007-73
E007-74
E007-75
E007-76
E007-77
E007-78
E007-79
E007-80
E007-81
E007-82
E007-83
E007-84
E007-85
E007-86
E007-87
E007-88
E007-89
E007-90
E007-91
E007-92
E007-93
E007-94
E007-95
E007-96

This sheet intentionally blank

REV	DESCRIPTION	JOB No	DRAFTER	DES. REVIEW	PM. APP'D	DATE
0	REDRAW 2022		M.L.			15.03.22

VENDOR DRAWING No:

DESIGNER
DRAFTER M.LIM 2022
SEW PROJECT MANAGER
DESIGN REVIEW
DRAFT CHECK
ASSET/ENG. MANAGER
APPROVED

COPYRIGHT
"THIS DOCUMENT IS AND SHALL REMAIN THE PROPERTY OF SOUTH EAST WATER. THIS DOCUMENT MAY ONLY BE USED FOR THE PURPOSE FOR WHICH IT WAS COMMISSIONED AND IN ACCORDANCE WITH THE TERMS OF ENGAGEMENT FOR THE COMMISSION. THIS DESIGN SHOULD NOT BE COPIED OR AMENDED WITHOUT WRITTEN PERMISSION FROM SOUTH EAST WATER. UNAUTHORISED USE OF THIS DOCUMENT IN ANY WAY IS PROHIBITED."©

South East Water
101 Wells Street, Frankston, VIC 3199 W : www.sew.com.au
T : 61 3 9552 3000 F : 61 3 9552 3001 E : info@sew.com.au

SEWER PUMP STATION
DESIGN DRAWINGS STANDARDS
BLANK

DATUM:
MELWAY REF:
SCALE:
SHEET SIZE: A1
SEW DRAWING NUMBER
SPVSD.E.007
0
SEW JOB No:
REV

CAD FILE NAME: C:\Michael's Backup\1. SP Sewer Pump Station\2022 Sewer Pump Station Electrical Standard drawings\Variable Speed Drive Operation 2022 Electrical Standards Drawings\ SPVSD.E.007 - Blank.dwg
Plotted @ 05/9/2022 11:58am by mlim

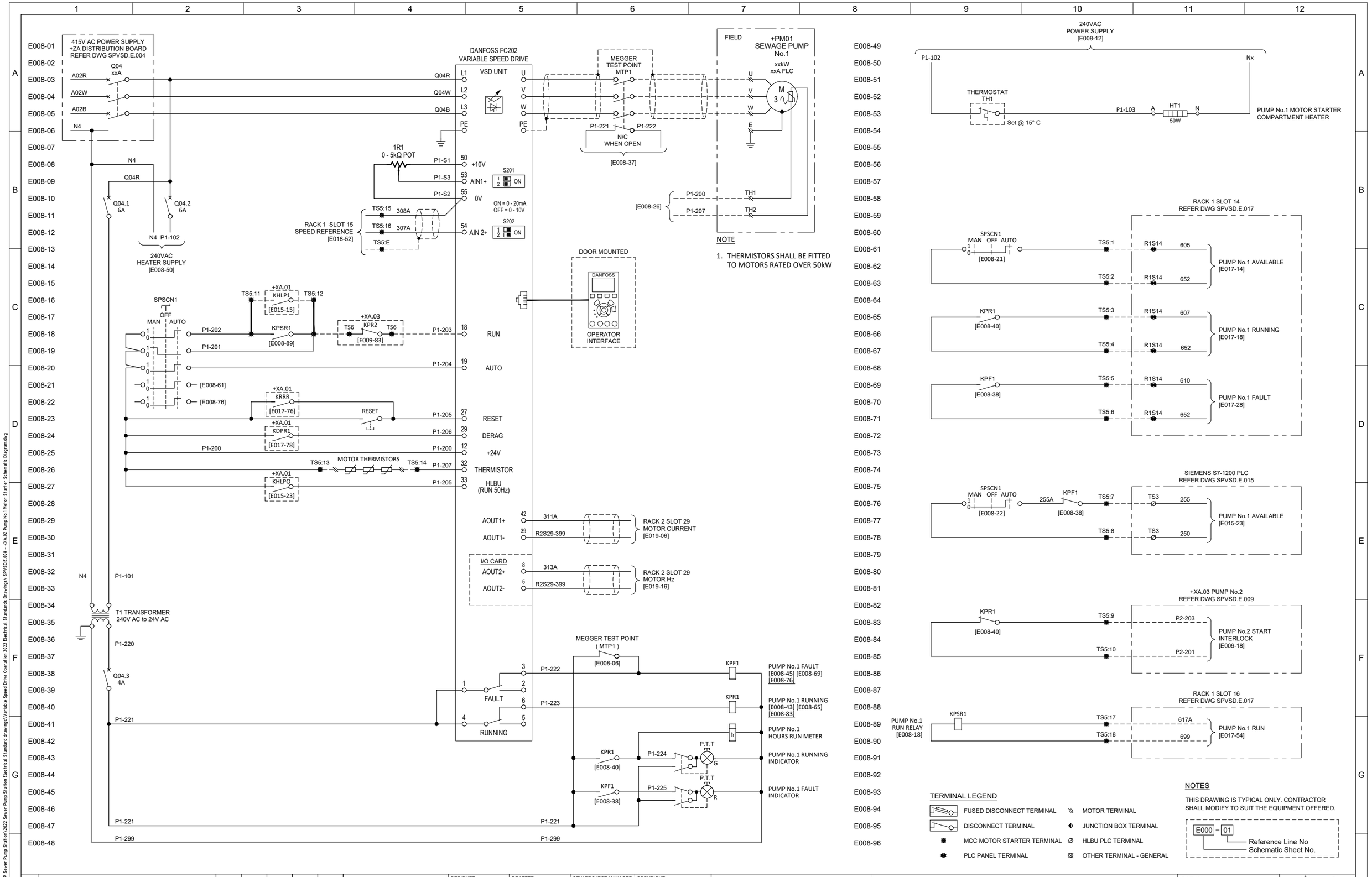

REV	DESCRIPTION	JOB No	DRAFTER	DES. REVIEW	PM. APP'D	DATE
0	REDRAW 2022		M.L.			15.03.22

VENDOR DRAWING No:

DESIGNER	DRAFTER	SEW PROJECT MANAGER
	M.LIM 2022	
DESIGN REVIEW	DRAFT CHECK	ASSET/ENG. MANAGER
APPROVED		

COPYRIGHT
"THIS DOCUMENT IS AND SHALL REMAIN THE PROPERTY OF SOUTH EAST WATER. THIS DOCUMENT MAY ONLY BE USED FOR THE PURPOSE FOR WHICH IT WAS COMMISSIONED AND IN ACCORDANCE WITH THE TERMS OF ENGAGEMENT FOR THE COMMISSION. THIS DESIGN SHOULD NOT BE COPIED OR AMENDED WITHOUT WRITTEN PERMISSION FROM SOUTH EAST WATER. UNAUTHORISED USE OF THIS DOCUMENT IN ANY WAY IS PROHIBITED."

South East Water
101 Wells Street, Frankston, VIC 3199 W : www.sew.com.au
T : 61 3 9552 3000 F : 61 3 9552 3001 E : info@sew.com.au

SEWER PUMP STATION
DESIGN DRAWINGS STANDARDS
+XA.02 PUMP No.1 MOTOR STARTER
SCHEMATIC DIAGRAM

DATUM:
MELWAY REF:
SCALE:
SHEET SIZE: A1
SEW DRAWING NUMBER
SPVSD.E.008
SEW JOB No:
REV 0

CAD FILE NAME: C:\Michael's Backup\16. SP Sewer Pump Station\2022 Sewer Pump Station Electrical Standard drawings\Variable Speed Drive Operation 2022 Electrical Standards Drawings\SPVSD.E.008 - +XA.02 Pump No.1 Motor Starter Schematic Diagram.dwg

Plotted @ 05/9/2022 11:58am by mlim

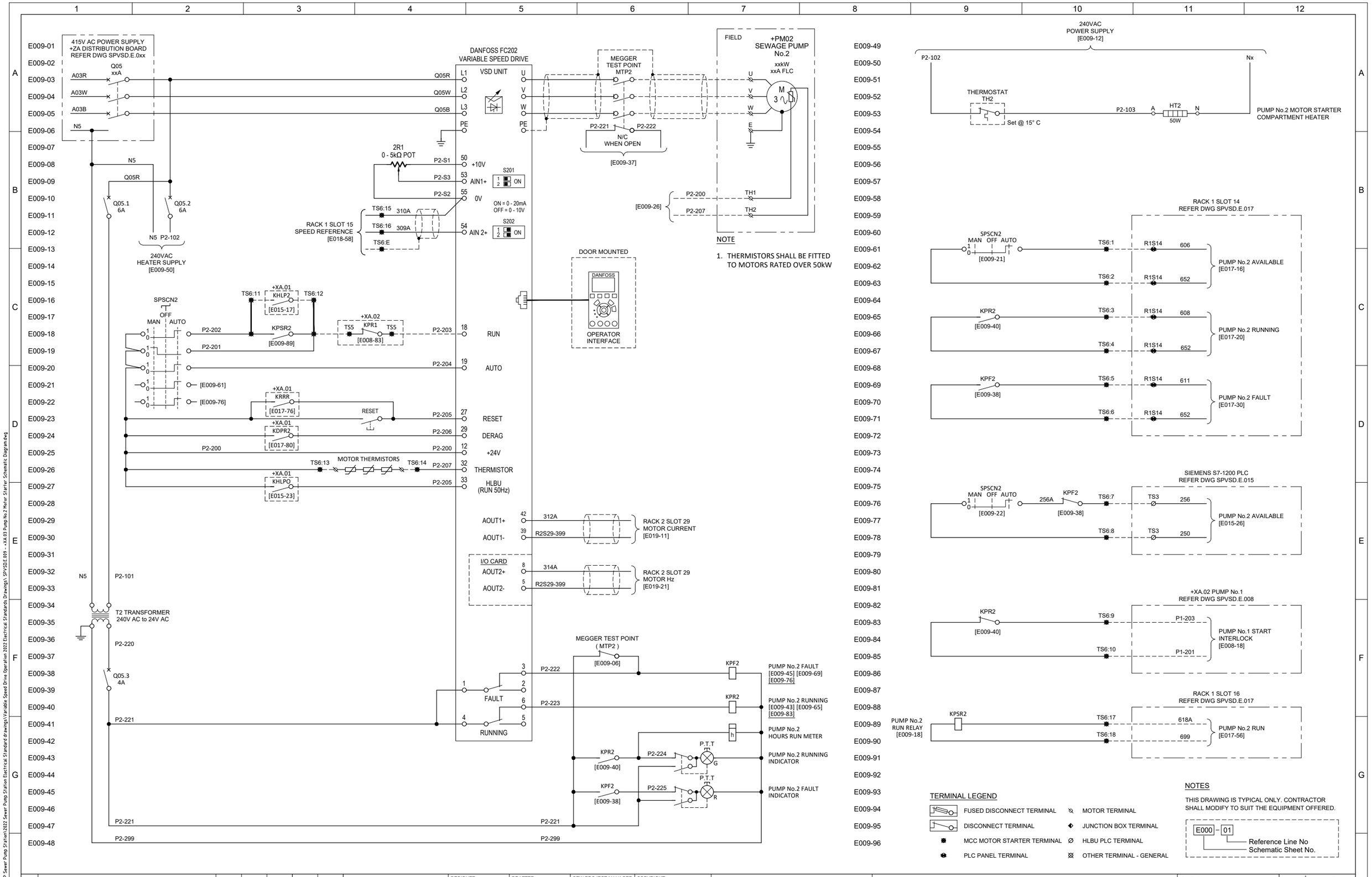

REV	DESCRIPTION	JOB No	DRAFTER	DES. REVIEW	PM. APP'D	DATE
0	REDRAW 2022		M.L.			15.03.22

VENDOR DRAWING No:

DESIGNER	DRAFTER	SEW PROJECT MANAGER
	M.LIM 2022	
DESIGN REVIEW	DRAFT CHECK	ASSET/ENG. MANAGER
APPROVED		

COPYRIGHT
"THIS DOCUMENT IS AND SHALL REMAIN THE PROPERTY OF SOUTH EAST WATER. THIS DOCUMENT MAY ONLY BE USED FOR THE PURPOSE FOR WHICH IT WAS COMMISSIONED AND IN ACCORDANCE WITH THE TERMS OF ENGAGEMENT FOR THE COMMISSION. THIS DESIGN SHOULD NOT BE COPIED OR AMENDED WITHOUT WRITTEN PERMISSION FROM SOUTH EAST WATER. UNAUTHORISED USE OF THIS DOCUMENT IN ANY WAY IS PROHIBITED."©

South East Water
101 Wells Street, Frankston, VIC 3199 W : www.sew.com.au
T : 61 3 9552 3000 F : 61 3 9552 3001 E : info@sew.com.au

SEWER PUMP STATION DESIGN DRAWINGS STANDARDS
+XA.03 PUMP No.2 MOTOR STARTER SCHEMATIC DIAGRAM

DATUM:
MELWAY REF:
SCALE:
SHEET SIZE: A1
SEW DRAWING NUMBER
SPVSD.E.009
SEW JOB No:
REV 0

CAD FILE NAME: C:\Michael's Backup\14. SP Sewer Pump Station\2022 Sewer Pump Station Electrical Standard drawings\Variable Speed Drive Operation 2022 Electrical Standards Drawings\SPVSD.E.009 - +XA.03 Pump No.2 Motor Starter Schematic Diagram.dwg
Plotted @ 05/9/2022 11:58am by mlim

E010-01
E010-02
E010-03
E010-04
E010-05
E010-06
E010-07
E010-08
E010-09
E010-10
E010-11
E010-12
E010-13
E010-14
E010-15
E010-16
E010-17
E010-18
E010-19
E010-20
E010-21
E010-22
E010-23
E010-24
E010-25
E010-26
E010-27
E010-28
E010-29
E010-30
E010-31
E010-32
E010-33
E010-34
E010-35
E010-36
E010-37
E010-38
E010-39
E010-40
E010-41
E010-42
E010-43
E010-44
E010-45
E010-46
E010-47
E010-48

This sheet intentionally blank

E010-49
E010-50
E010-51
E010-52
E010-53
E010-54
E010-55
E010-56
E010-57
E010-58
E010-59
E010-60
E010-61
E010-62
E010-63
E010-64
E010-65
E010-66
E010-67
E010-68
E010-69
E010-70
E010-71
E010-72
E010-73
E010-74
E010-75
E010-76
E010-77
E010-78
E010-79
E010-80
E010-81
E010-82
E010-83
E010-84
E010-85
E010-86
E010-87
E010-88
E010-89
E010-90
E010-91
E010-92
E010-93
E010-94
E010-95
E010-96

REV	DESCRIPTION	JOB No	DRAFTER	DES. REVIEW	PM. APP'D	DATE
0	REDRAW 2022		M.L.			15.03.22

VENDOR DRAWING No:

DESIGNER
DRAFTER M.LIM 2022
SEW PROJECT MANAGER
DESIGN REVIEW
DRAFT CHECK
ASSET/ENG. MANAGER
APPROVED

COPYRIGHT
"THIS DOCUMENT IS AND SHALL REMAIN THE PROPERTY OF SOUTH EAST WATER. THIS DOCUMENT MAY ONLY BE USED FOR THE PURPOSE FOR WHICH IT WAS COMMISSIONED AND IN ACCORDANCE WITH THE TERMS OF ENGAGEMENT FOR THE COMMISSION. THIS DESIGN SHOULD NOT BE COPIED OR AMENDED WITHOUT WRITTEN PERMISSION FROM SOUTH EAST WATER. UNAUTHORISED USE OF THIS DOCUMENT IN ANY WAY IS PROHIBITED."©

South East Water
101 Wells Street, Frankston, VIC 3199 W : www.sew.com.au
T : 61 3 9552 3000 F : 61 3 9552 3001 E : info@sew.com.au

SEWER PUMP STATION
DESIGN DRAWINGS STANDARDS
BLANK

DATUM:
MELWAY REF:
SCALE:
SHEET SIZE: A1
SEW DRAWING NUMBER
SPVSD.E.010
0
SEW JOB No:
REV

CAD FILE NAME: C:\Michael's Backup\1. SP Sewer Pump Station\2022 Sewer Pump Station Electrical Standard drawings\Variable Speed Drive Operation 2022 Electrical Standards Drawings\ SPVSD.E.010 - Blank.dwg
Plotted @ 05/9/2022 11:58am by mlim

E011-01
E011-02
E011-03
E011-04
E011-05
E011-06
E011-07
E011-08
E011-09
E011-10
E011-11
E011-12
E011-13
E011-14
E011-15
E011-16
E011-17
E011-18
E011-19
E011-20
E011-21
E011-22
E011-23
E011-24
E011-25
E011-26
E011-27
E011-28
E011-29
E011-30
E011-31
E011-32
E011-33
E011-34
E011-35
E011-36
E011-37
E011-38
E011-39
E011-40
E011-41
E011-42
E011-43
E011-44
E011-45
E011-46
E011-47
E011-48

This sheet intentionally blank

E011-49
E011-50
E011-51
E011-52
E011-53
E011-54
E011-55
E011-56
E011-57
E011-58
E011-59
E011-60
E011-61
E011-62
E011-63
E011-64
E011-65
E011-66
E011-67
E011-68
E011-69
E011-70
E011-71
E011-72
E011-73
E011-74
E011-75
E011-76
E011-77
E011-78
E011-79
E011-80
E011-81
E011-82
E011-83
E011-84
E011-85
E011-86
E011-87
E011-88
E011-89
E011-90
E011-91
E011-92
E011-93
E011-94
E011-95
E011-96

REV	DESCRIPTION	JOB No	DRAFTER	DES. REVIEW	PM. APP'D	DATE
0	REDRAW 2022		M.L.			15.03.22

VENDOR DRAWING No:

DESIGNER
DRAFTER M.LIM 2022
SEW PROJECT MANAGER
DESIGN REVIEW
DRAFT CHECK
ASSET/ENG. MANAGER
APPROVED

COPYRIGHT
"THIS DOCUMENT IS AND SHALL REMAIN THE PROPERTY OF SOUTH EAST WATER. THIS DOCUMENT MAY ONLY BE USED FOR THE PURPOSE FOR WHICH IT WAS COMMISSIONED AND IN ACCORDANCE WITH THE TERMS OF ENGAGEMENT FOR THE COMMISSION. THIS DESIGN SHOULD NOT BE COPIED OR AMENDED WITHOUT WRITTEN PERMISSION FROM SOUTH EAST WATER. UNAUTHORISED USE OF THIS DOCUMENT IN ANY WAY IS PROHIBITED."©

South East Water
101 Wells Street, Frankston, VIC 3199 W : www.sew.com.au
T : 61 3 9552 3000 F : 61 3 9552 3001 E : info@sew.com.au

SEWER PUMP STATION
DESIGN DRAWINGS STANDARDS
BLANK

DATUM:
MELWAY REF:
SCALE:
SHEET SIZE: A1
SEW DRAWING NUMBER
SPVSD.E.011
0
SEW JOB No:
REV

CAD FILE NAME: C:\Michael's Backup\1. SP Sewer Pump Station\2022 Sewer Pump Station Electrical Standard drawings\Variable Speed Drive Operation 2022 Electrical Standards Drawings\ SPVSD.E.011 - Blank.dwg
Plotted @ 05/9/2022 11:58am by mlim

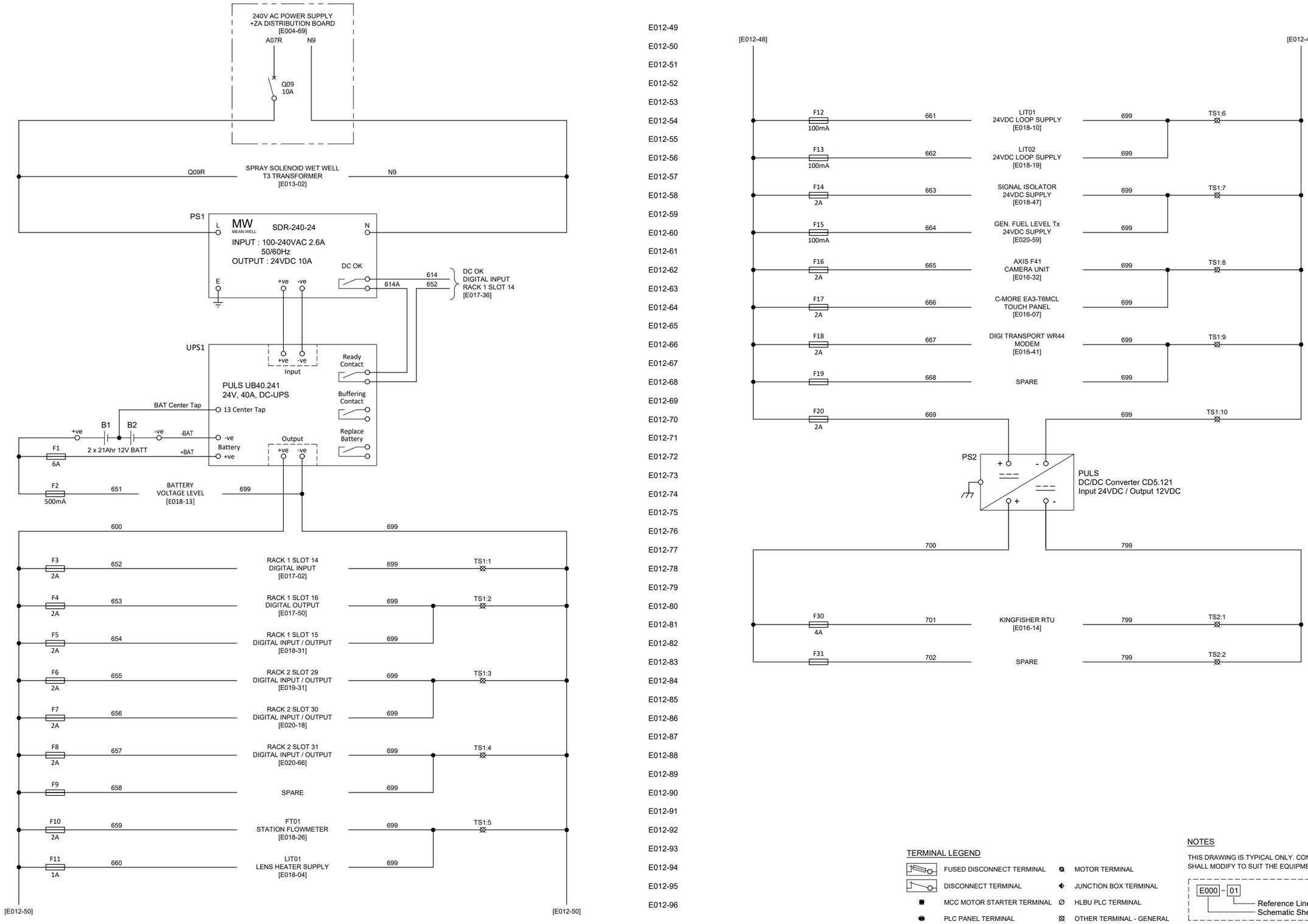

TERMINAL LEGEND

- FUSED DISCONNECT TERMINAL
- DISCONNECT TERMINAL
- MCC MOTOR STARTER TERMINAL
- PLC PANEL TERMINAL
- MOTOR TERMINAL
- JUNCTION BOX TERMINAL
- HLBU PLC TERMINAL
- OTHER TERMINAL - GENERAL

NOTES

THIS DRAWING IS TYPICAL ONLY. CONTRACTOR SHALL MODIFY TO SUIT THE EQUIPMENT OFFERED.

E000 – 01
Reference Line No
Schematic Sheet No.

REV	DESCRIPTION	JOB No	DRAFTER	DES. REVIEW	PM. APP'D	DATE
1	UPS REVISED TO PULS UB40.241 (WAS MEAN WELL)		M.L.			15.08.22
0	REDRAW 2022		M.L.			15.03.22

VENDOR DRAWING No:

DESIGNER	DRAFTER M.LIM 2022	SEW PROJECT MANAGER
DESIGN REVIEW	DRAFT CHECK	ASSET/ENG. MANAGER
APPROVED		

COPYRIGHT
"THIS DOCUMENT IS AND SHALL REMAIN THE PROPERTY OF SOUTH EAST WATER. THIS DOCUMENT MAY ONLY BE USED FOR THE PURPOSE FOR WHICH IT WAS COMMISSIONED AND IN ACCORDANCE WITH THE TERMS OF ENGAGEMENT FOR THE COMMISSION. THIS DESIGN SHOULD NOT BE COPIED OR AMENDED WITHOUT WRITTEN PERMISSION FROM SOUTH EAST WATER. UNAUTHORISED USE OF THIS DOCUMENT IN ANY WAY IS PROHIBITED." ©

South East Water
101 Wells Street, Frankston, VIC 3199 W : www.sew.com.au
T : 61 3 9552 3000 F : 61 3 9552 3001 E : info@sew.com.au

SEWER PUMP STATION DESIGN DRAWINGS STANDARDS +XA.01 DC POWER DISTRIBUTION SCHEMATIC DIAGRAM

DATUM:
MELWAY REF:
SCALE:
SHEET SIZE: A1
SEW DRAWING NUMBER
SPVSD.E.012
SEW JOB No:
REV 1

CAD FILE NAME: C:\Michael's Backup\SL SP Sewer Pump Station\2022 Sewer Pump Station Electrical Standard drawings\Variable Speed Drive Operation 2022 Electrical Standards Drawings\SPVSDLE012 - +XA.01DC Power Distribution Schematic Diagram.dwg
Plotted @ 05/9/2022 11:58am by mlim

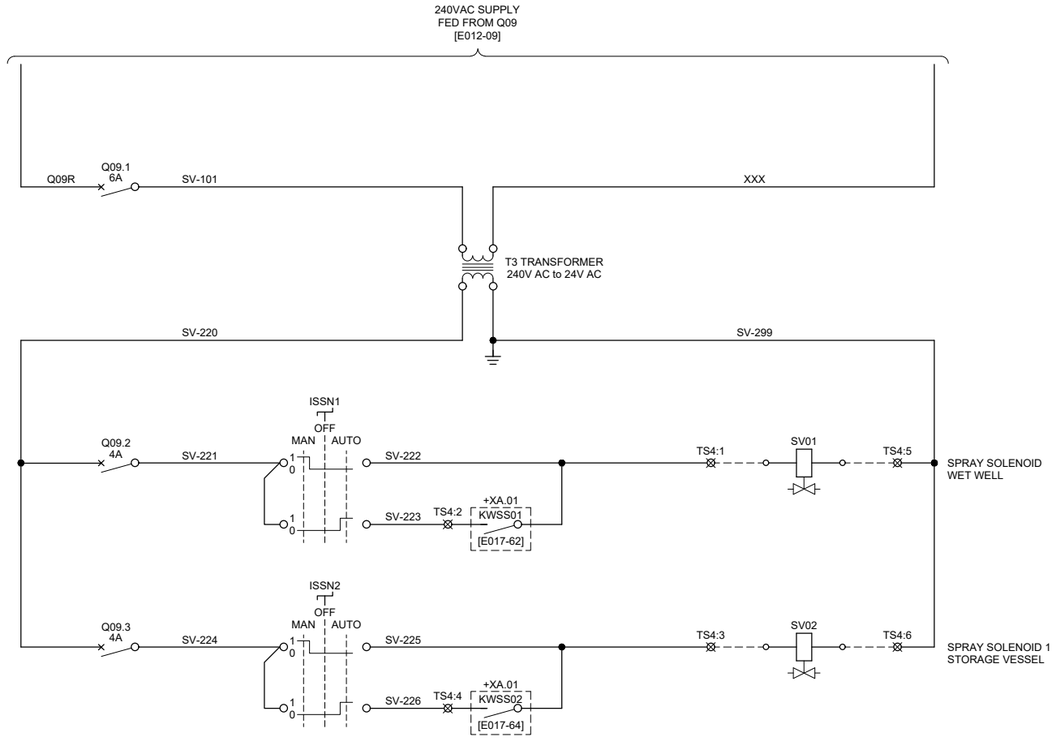

TERMINAL LEGEND

- FUSED DISCONNECT TERMINAL
- DISCONNECT TERMINAL
- MCC MOTOR STARTER TERMINAL
- PLC PANEL TERMINAL
- MOTOR TERMINAL
- JUNCTION BOX TERMINAL
- HLBU PLC TERMINAL
- OTHER TERMINAL - GENERAL

NOTES

THIS DRAWING IS TYPICAL ONLY. CONTRACTOR SHALL MODIFY TO SUIT THE EQUIPMENT OFFERED.

E000 – 01
Reference Line No
Schematic Sheet No.

REV	DESCRIPTION	JOB No	DRAFTER	DES. REVIEW	PM. APP'D	DATE
0	REDRAW 2022		M.L.			15.03.22

VENDOR DRAWING No:

DESIGNER | DRAFTER M.LIM 2022 | SEW PROJECT MANAGER
DESIGN REVIEW | DRAFT CHECK | ASSET/ENG. MANAGER
APPROVED

COPYRIGHT
"THIS DOCUMENT IS AND SHALL REMAIN THE PROPERTY OF SOUTH EAST WATER. THIS DOCUMENT MAY ONLY BE USED FOR THE PURPOSE FOR WHICH IT WAS COMMISSIONED AND IN ACCORDANCE WITH THE TERMS OF ENGAGEMENT FOR THE COMMISSION. THIS DESIGN SHOULD NOT BE COPIED OR AMENDED WITHOUT WRITTEN PERMISSION FROM SOUTH EAST WATER. UNAUTHORISED USE OF THIS DOCUMENT IN ANY WAY IS PROHIBITED." ©

South East Water
101 Wells Street, Frankston, VIC 3199 W : www.sew.com.au
T : 61 3 9552 3000 F : 61 3 9552 3001 E : info@sew.com.au

SEWER PUMP STATION
DESIGN DRAWINGS STANDARDS
SPRAY SOLENOIDS
SCHEMATIC DIAGRAM

DATUM:
MELWAY REF:
SCALE:
SHEET SIZE: A1
SEW DRAWING NUMBER
SPVSD.E.013
0
REV
SEW JOB No:

CAD FILE NAME: C:\Michael's Backup\1%. SP Sewer Pump Station\2022 Sewer Pump Station Electrical Standard drawings\Variable Speed Drive Operation 2022 Electrical Standards Drawings\ SPVSDE.013 - Spray Solenoids Schematic Diagram.dwg
Plotted @ 06/9/2022 2:44pm by mlim

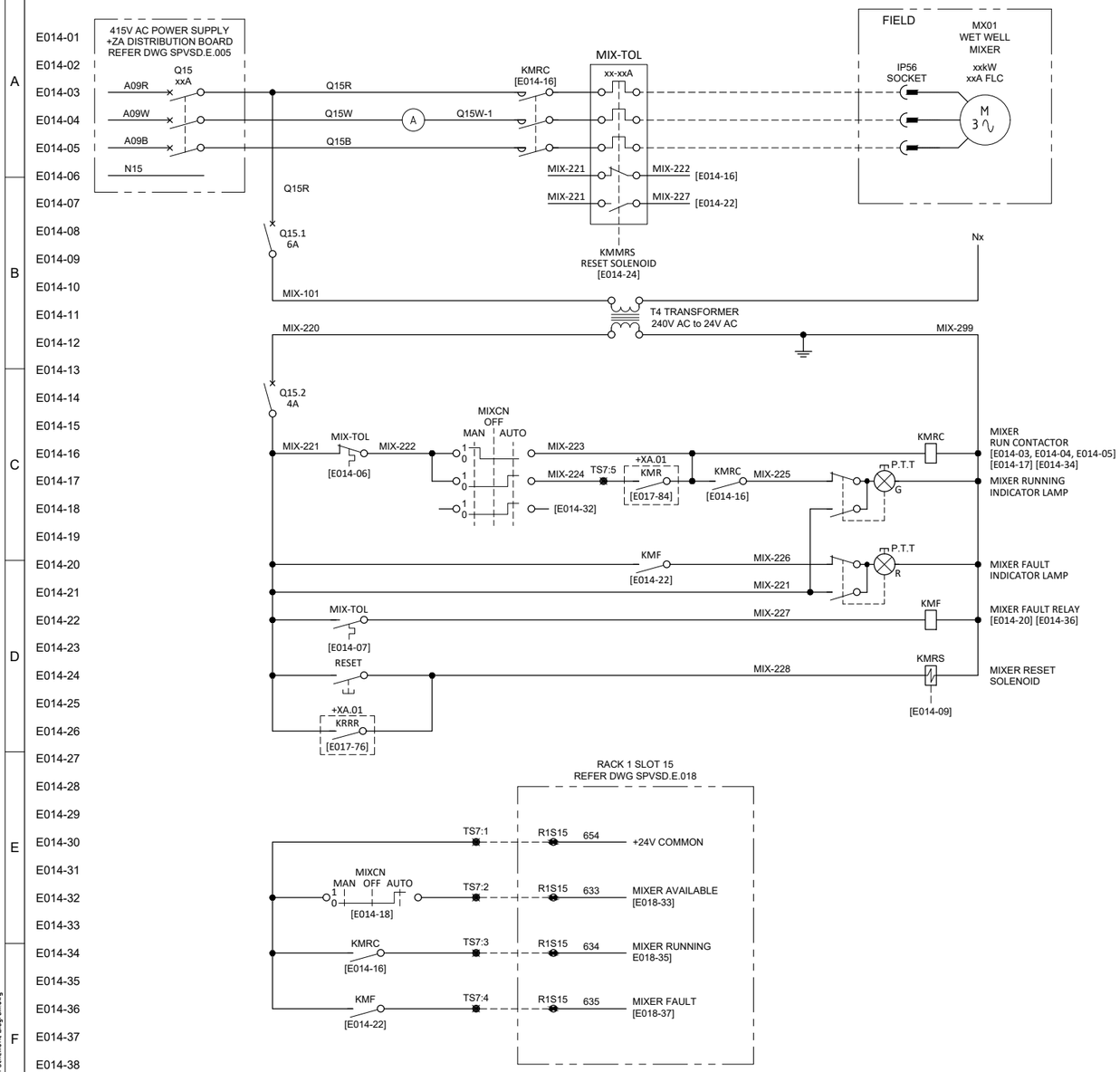

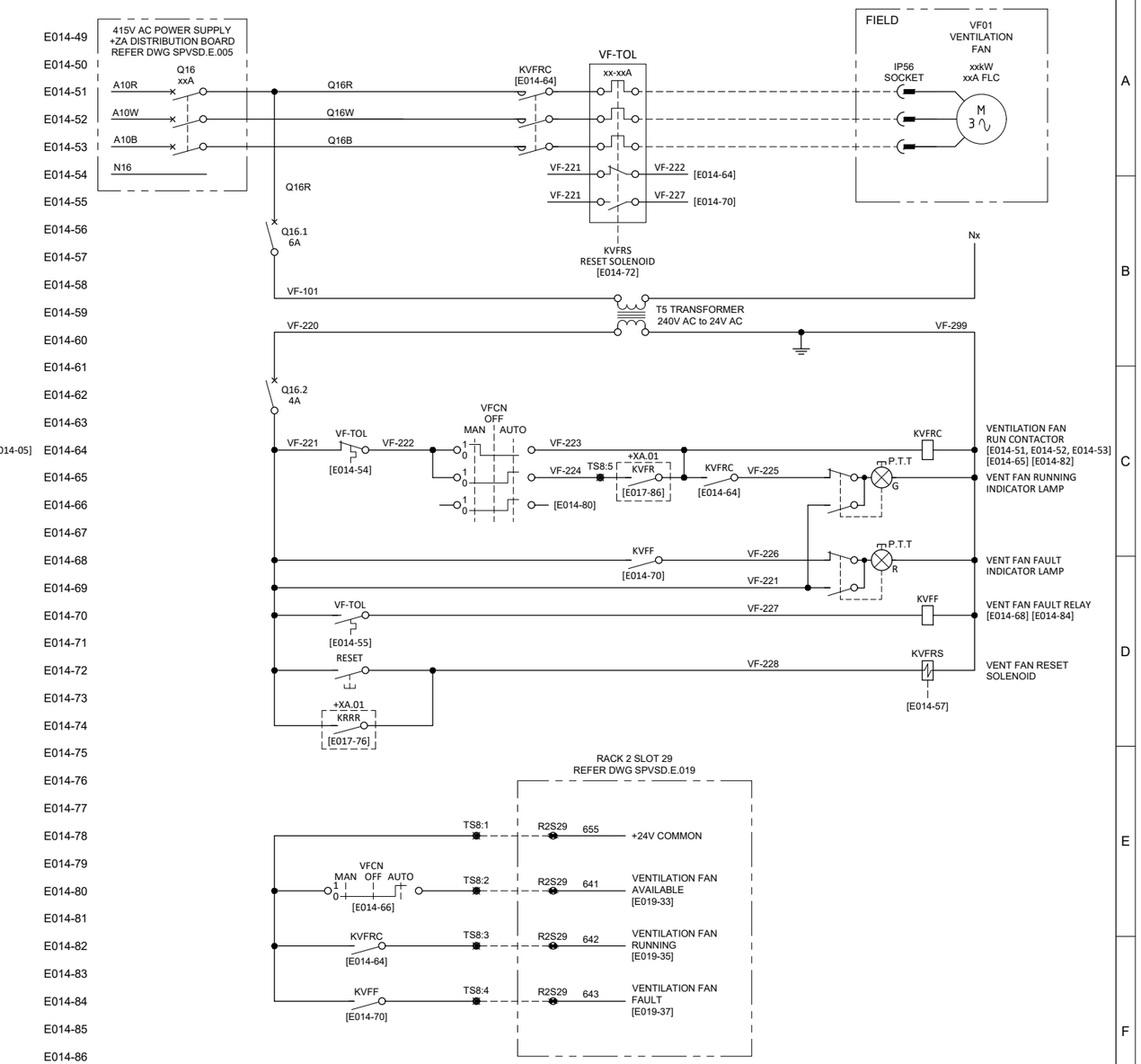

+XA.05 WET WELL MIXER DOL MOTOR STARTER

+XA.06 VENTILATION FAN DOL MOTOR STARTER

TERMINAL LEGEND

- FUSED DISCONNECT TERMINAL
- DISCONNECT TERMINAL
- MCC MOTOR STARTER TERMINAL
- PLC PANEL TERMINAL
- MOTOR TERMINAL
- JUNCTION BOX TERMINAL
- HLBU PLC TERMINAL
- OTHER TERMINAL - GENERAL

NOTES

THIS DRAWING IS TYPICAL ONLY. CONTRACTOR SHALL MODIFY TO SUIT THE EQUIPMENT OFFERED.

E000 - 01
Reference Line No
Schematic Sheet No.

REV	DESCRIPTION	JOB No	DRAFTER	DES. REVIEW	PM. APP'D	DATE
0	REDRAW 2022		M.L.			15.03.22

VENDOR DRAWING No:

DESIGNER | DRAFTER M.LIM 2022 | SEW PROJECT MANAGER
DESIGN REVIEW | DRAFT CHECK | ASSET/ENG. MANAGER
APPROVED

COPYRIGHT
"THIS DOCUMENT IS AND SHALL REMAIN THE PROPERTY OF SOUTH EAST WATER. THIS DOCUMENT MAY ONLY BE USED FOR THE PURPOSE FOR WHICH IT WAS COMMISSIONED AND IN ACCORDANCE WITH THE TERMS OF ENGAGEMENT FOR THE COMMISSION. THIS DESIGN SHOULD NOT BE COPIED OR AMENDED WITHOUT WRITTEN PERMISSION FROM SOUTH EAST WATER. UNAUTHORISED USE OF THIS DOCUMENT IN ANY WAY IS PROHIBITED." ©

South East Water
101 Wells Street, Frankston, VIC 3199 W : www.sew.com.au
T : 61 3 9552 3000 F : 61 3 9552 3001 E : info@sew.com.au

SEWER PUMP STATION DESIGN DRAWINGS STANDARDS +XA.05 MIXER & +XA.06 VENTILATION FAN SCHEMATIC DIAGRAM

DATUM:
MELWAY REF:
SCALE:
SHEET SIZE: A1
SEW DRAWING NUMBER
SPVSD.E.014
SEW JOB No:
REV 0

CAD FILE NAME: X:\DRAWN\1\03-ELE-1\2-MECH-1\02-INF-1\TYPICA-1\ELECTR-1\02-VAR-1\ SPVSD.E.014. - +XA.05 Mixer & +XA.06 Vent Fan Schematic Diagram.dwg

Plotted @ 06/10/2022 12:03pm by mlim

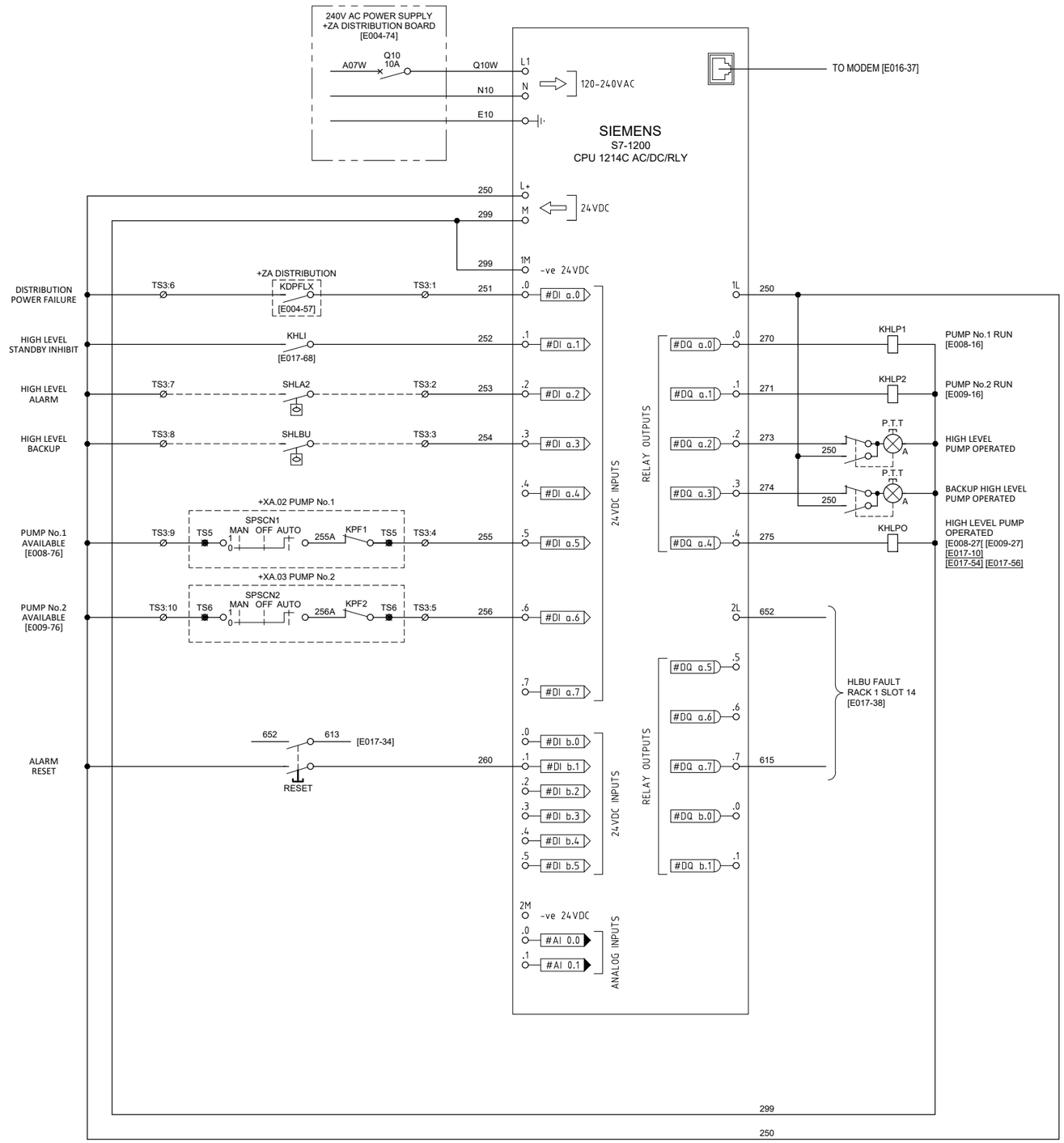

E015-01 E015-02 E015-03 E015-04 E015-05 E015-06 E015-07 E015-08 E015-09 E015-10 E015-11 E015-12 E015-13 E015-14 E015-15 E015-16 E015-17 E015-18 E015-19 E015-20 E015-21 E015-22 E015-23 E015-24 E015-25 E015-26 E015-27 E015-28 E015-29 E015-30 E015-31 E015-32 E015-33 E015-34 E015-35 E015-36 E015-37 E015-38 E015-39 E015-40 E015-41 E015-42 E015-43 E015-44 E015-45 E015-46 E015-47 E015-48

E015-49 E015-50 E015-51 E015-52 E015-53 E015-54 E015-55 E015-56 E015-57 E015-58 E015-59 E015-60 E015-61 E015-62 E015-63 E015-64 E015-65 E015-66 E015-67 E015-68 E015-69 E015-70 E015-71 E015-72 E015-73 E015-74 E015-75 E015-76 E015-77 E015-78 E015-79 E015-80 E015-81 E015-82 E015-83 E015-84 E015-85 E015-86 E015-87 E015-88 E015-89 E015-90 E015-91 E015-92 E015-93 E015-94 E015-95 E015-96

TERMINAL LEGEND

- FUSED DISCONNECT TERMINAL
- DISCONNECT TERMINAL
- MCC MOTOR STARTER TERMINAL
- PLC PANEL TERMINAL
- MOTOR TERMINAL
- JUNCTION BOX TERMINAL
- HLBU PLC TERMINAL
- OTHER TERMINAL - GENERAL

NOTES

THIS DRAWING IS TYPICAL ONLY. CONTRACTOR SHALL MODIFY TO SUIT THE EQUIPMENT OFFERED.

E000 - 01
Reference Line No
Schematic Sheet No.

REV	DESCRIPTION	JOB No	DRAFTER	DES. REVIEW	PM. APP'D	DATE
0	REDRAW 2022		M.L.			15.03.22

VENDOR DRAWING No:

DESIGNER	DRAFTER M.LIM 2022	SEW PROJECT MANAGER
DESIGN REVIEW	DRAFT CHECK	ASSET/ENG. MANAGER
APPROVED		

COPYRIGHT
"THIS DOCUMENT IS AND SHALL REMAIN THE PROPERTY OF SOUTH EAST WATER. THIS DOCUMENT MAY ONLY BE USED FOR THE PURPOSE FOR WHICH IT WAS COMMISSIONED AND IN ACCORDANCE WITH THE TERMS OF ENGAGEMENT FOR THE COMMISSION. THIS DESIGN SHOULD NOT BE COPIED OR AMENDED WITHOUT WRITTEN PERMISSION FROM SOUTH EAST WATER. UNAUTHORISED USE OF THIS DOCUMENT IN ANY WAY IS PROHIBITED."

South East Water
101 Wells Street, Frankston, VIC 3199 W : www.sew.com.au
T : 61 3 9552 3000 F : 61 3 9552 3001 E : info@sew.com.au

SEWER PUMP STATION DESIGN DRAWINGS STANDARDS +XA.01 HIGH LEVEL PUMP OPERATION SCHEMATIC DIAGRAM

DATUM:
MELWAY REF:
SCALE:
SHEET SIZE: A1
SEW DRAWING NUMBER
SPVSD.E.015
SEW JOB No:
REV 0

CAD FILE NAME: C:\Michael's Backup\16. SP Sewer Pump Station\2022 Sewer Pump Station Electrical Standard drawings\Variable Speed Drive Operation 2022 Electrical Standards Drawings\SPVSD.E.015 - High Level Pump Operation Schematic Diagram.dwg
Plotted @ 05/9/2022 11:59am by mlim

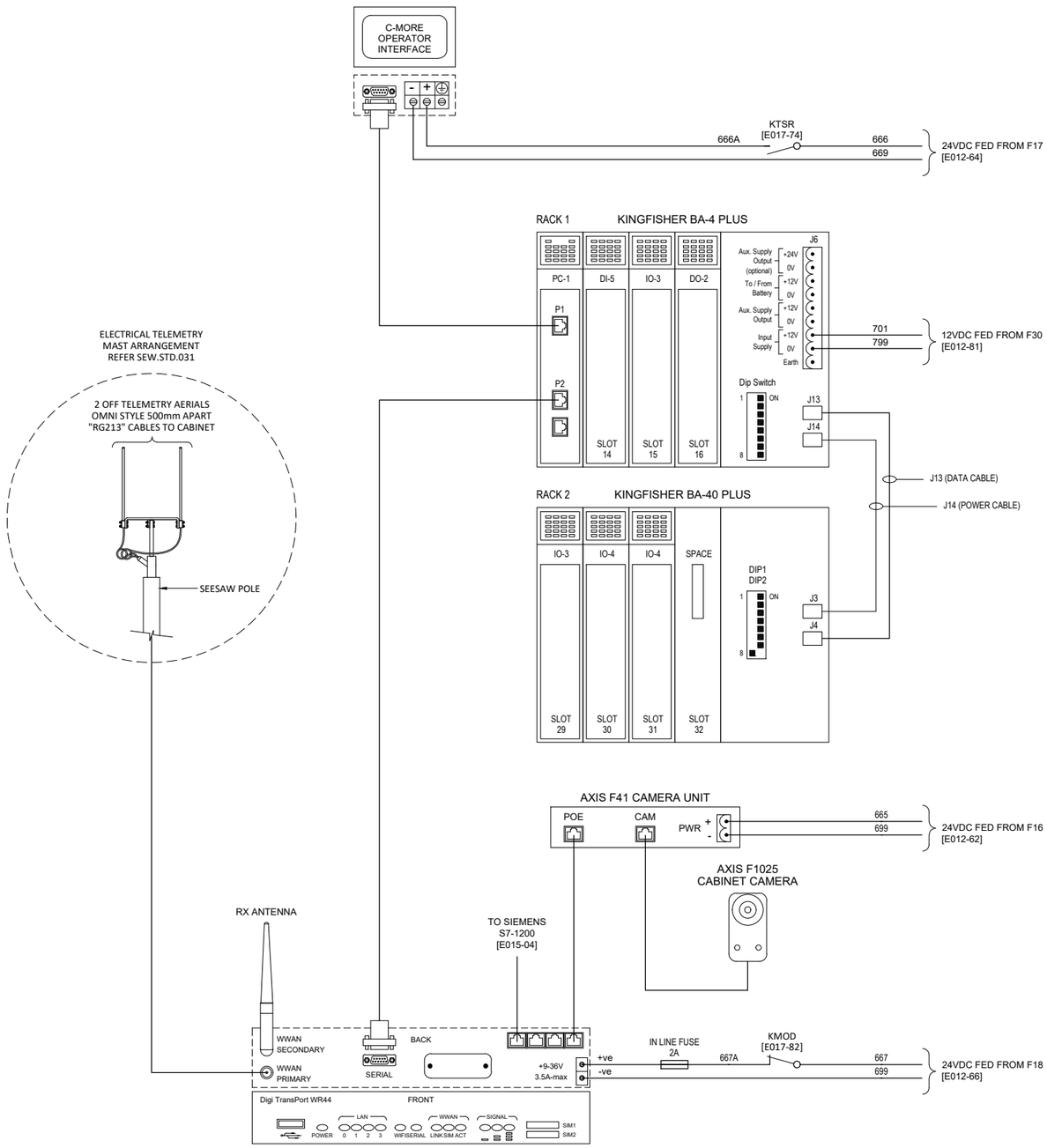

TERMINAL LEGEND

- FUSED DISCONNECT TERMINAL
- DISCONNECT TERMINAL
- MCC MOTOR STARTER TERMINAL
- PLC PANEL TERMINAL
- MOTOR TERMINAL
- JUNCTION BOX TERMINAL
- HLBU PLC TERMINAL
- OTHER TERMINAL - GENERAL

NOTES

THIS DRAWING IS TYPICAL ONLY. CONTRACTOR SHALL MODIFY TO SUIT THE EQUIPMENT OFFERED.

E000 – 01
Reference Line No
Schematic Sheet No.

REV	DESCRIPTION	JOB No	DRAFTER	DES. REVIEW	PM. APP'D	DATE
0	REDRAW 2022		M.L.			15.03.22

VENDOR DRAWING No:

DESIGNER | DRAFTER M.LIM 2022 | SEW PROJECT MANAGER
DESIGN REVIEW | DRAFT CHECK | ASSET/ENG. MANAGER
APPROVED

COPYRIGHT
"THIS DOCUMENT IS AND SHALL REMAIN THE PROPERTY OF SOUTH EAST WATER. THIS DOCUMENT MAY ONLY BE USED FOR THE PURPOSE FOR WHICH IT WAS COMMISSIONED AND IN ACCORDANCE WITH THE TERMS OF ENGAGEMENT FOR THE COMMISSION. THIS DESIGN SHOULD NOT BE COPIED OR AMENDED WITHOUT WRITTEN PERMISSION FROM SOUTH EAST WATER. UNAUTHORISED USE OF THIS DOCUMENT IN ANY WAY IS PROHIBITED."©

South East Water
101 Wells Street, Frankston, VIC 3199 W : www.sew.com.au
T : 61 3 9552 3000 F : 61 3 9552 3001 E : info@sew.com.au

SEWER PUMP STATION DESIGN DRAWINGS STANDARDS +XA.01 RTU, MODEM, CABINET CAMERA & HMI SCHEMATIC DIAGRAM

DATUM:
MELWAY REF:
SCALE:
SHEET SIZE: A1
SEW DRAWING NUMBER
SPVSD.E.016
0
SEW JOB No:
REV

CAD FILE NAME: X:\DRAWIN~1\03-ELE~1\2139~1~MC\026ED1~1\NF\%7B69~1SPS\0225E~1\VARIAB~1\ SPVSD.E.016 - RTU, Modem, Cabinet Camera & HMI Schematic Diagram.dwg
Plotted @ 03/10/2022 1:52pm by mlim

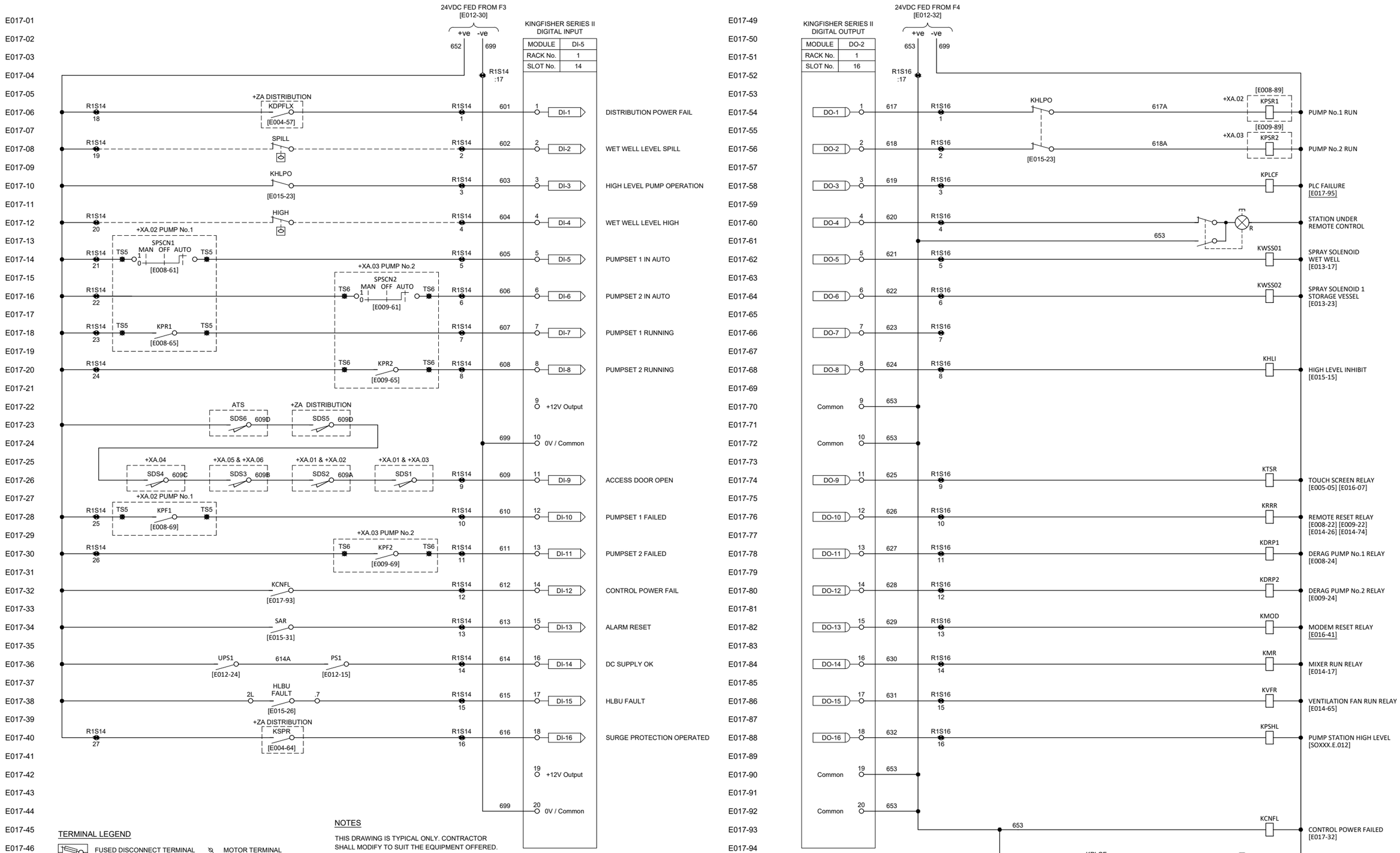

REV	DESCRIPTION	JOB No	DRAFTER	DES. REVIEW	PM. APP'D	DATE
0	REDRAW 2022		M.L.			15.03.22

VENDOR DRAWING No:

DESIGNER	DRAFTER	SEW PROJECT MANAGER
	M.LIM 2022	
DESIGN REVIEW	DRAFT CHECK	ASSET/ENG. MANAGER
APPROVED		

COPYRIGHT
"THIS DOCUMENT IS AND SHALL REMAIN THE PROPERTY OF SOUTH EAST WATER. THIS DOCUMENT MAY ONLY BE USED FOR THE PURPOSE FOR WHICH IT WAS COMMISSIONED AND IN ACCORDANCE WITH THE TERMS OF ENGAGEMENT FOR THE COMMISSION. THIS DESIGN SHOULD NOT BE COPIED OR AMENDED WITHOUT WRITTEN PERMISSION FROM SOUTH EAST WATER. UNAUTHORISED USE OF THIS DOCUMENT IN ANY WAY IS PROHIBITED."©

South East Water
101 Wells Street, Frankston, VIC 3199 W : www.sew.com.au
T : 61 3 9552 3000 F : 61 3 9552 3001 E : info@sew.com.au

SEWER PUMP STATION DESIGN DRAWINGS STANDARDS +XA.01 RACK 1 SLOT 14 & SLOT 16 SCHEMATIC DIAGRAM

DATUM:
MELWAY REF:
SCALE:
SHEET SIZE: A1
SEW DRAWING NUMBER
SPVSD.E.017
SEW JOB No:
REV 0

CAD FILE NAME: C:\Michael's Backup\1x_SP Sewer Pump Station\2022 Sewer Pump Station Electrical Standard drawings\Variable Speed Drive Operation 2022 Electrical Standards Drawings\ SPVSD.E.017 - +XA.01 Rack 1 Slot 14 & Slot 16 Schematic Diagram.dwg

Plotted @ 05/9/2022 2:45pm by mlim

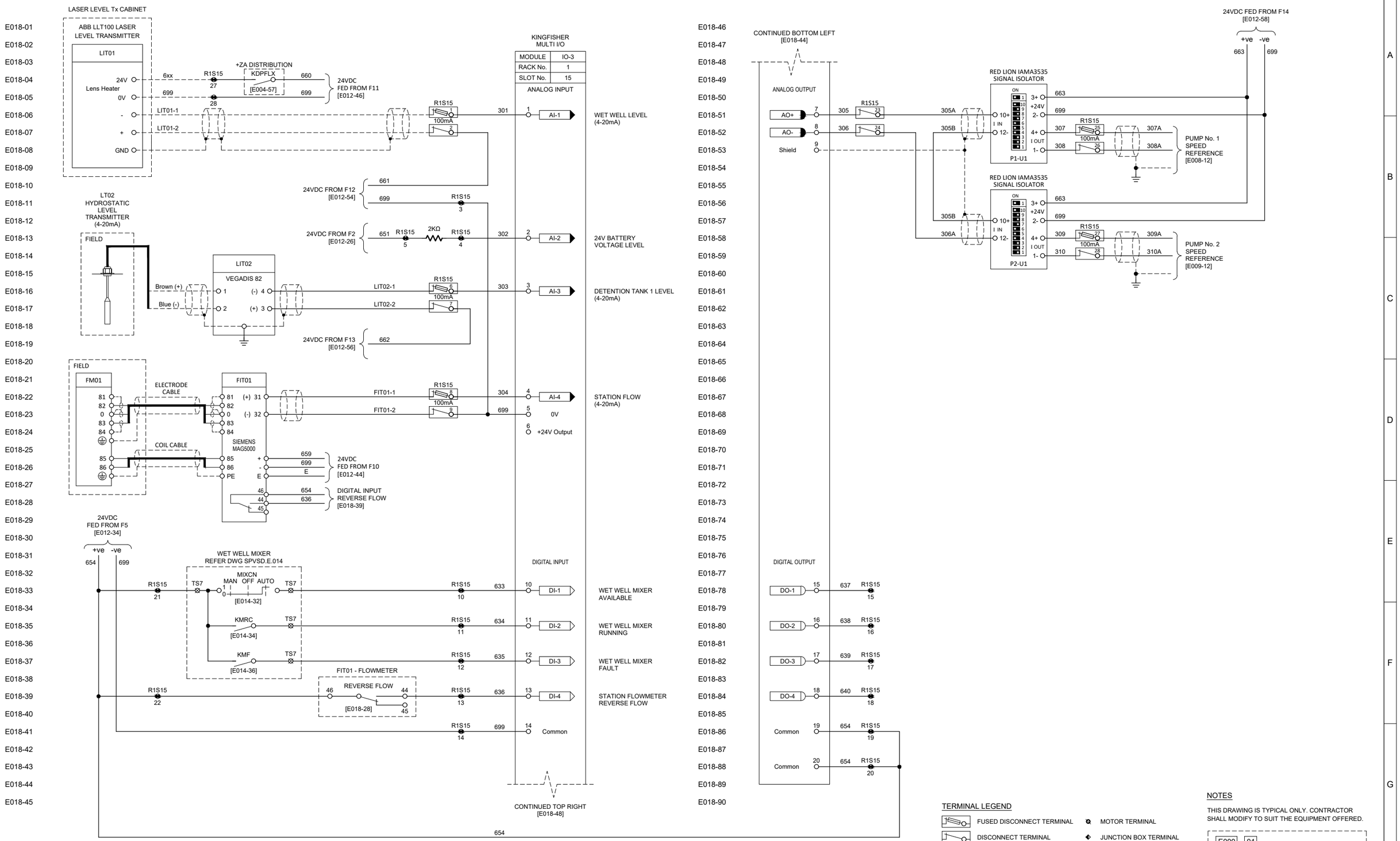

TERMINAL LEGEND

- FUSED DISCONNECT TERMINAL
- DISCONNECT TERMINAL
- MCC MOTOR STARTER TERMINAL
- PLC PANEL TERMINAL
- MOTOR TERMINAL
- JUNCTION BOX TERMINAL
- HLBU PLC TERMINAL
- OTHER TERMINAL - GENERAL

NOTES

THIS DRAWING IS TYPICAL ONLY. CONTRACTOR SHALL MODIFY TO SUIT THE EQUIPMENT OFFERED.

E000 - 01
Reference Line No
Schematic Sheet No.

REV	DESCRIPTION	JOB No	DRAFTER	DES. REVIEW	PM. APP'D	DATE
0	REDRAW 2022		M.L.			15.03.22

VENDOR DRAWING No:

DESIGNER | DRAFTER M.LIM 2022 | SEW PROJECT MANAGER
DESIGN REVIEW | DRAFT CHECK | ASSET/ENG. MANAGER
APPROVED

COPYRIGHT
"THIS DOCUMENT IS AND SHALL REMAIN THE PROPERTY OF SOUTH EAST WATER. THIS DOCUMENT MAY ONLY BE USED FOR THE PURPOSE FOR WHICH IT WAS COMMISSIONED AND IN ACCORDANCE WITH THE TERMS OF ENGAGEMENT FOR THE COMMISSION. THIS DESIGN SHOULD NOT BE COPIED OR AMENDED WITHOUT WRITTEN PERMISSION FROM SOUTH EAST WATER. UNAUTHORISED USE OF THIS DOCUMENT IN ANY WAY IS PROHIBITED."©

South East Water
101 Wells Street, Frankston, VIC 3199 W : www.sew.com.au
T : 61 3 9552 3000 F : 61 3 9552 3001 E : info@sew.com.au

SEWER PUMP STATION DESIGN DRAWINGS STANDARDS +XA.01 RACK 1 SLOT 15 SCHEMATIC DIAGRAM

DATUM:
MELWAY REF:
SCALE:
SHEET SIZE: A1
SEW DRAWING NUMBER
SPVSD.E.018
0
SEW JOB No:
REV

CAD FILE NAME: C:\Michael's Backup\XL SP Sewer Pump Station\2022 Sewer Pump Station Electrical Standard Drawings\Variable Speed Drive Operation 2022 Electrical Standards Drawings\ SPVSD.E.018 - +XA.01 Rack 1 Slot 15 Schematic Diagram.dwg
Plotted @ 05/9/2022 11:59am by mlim

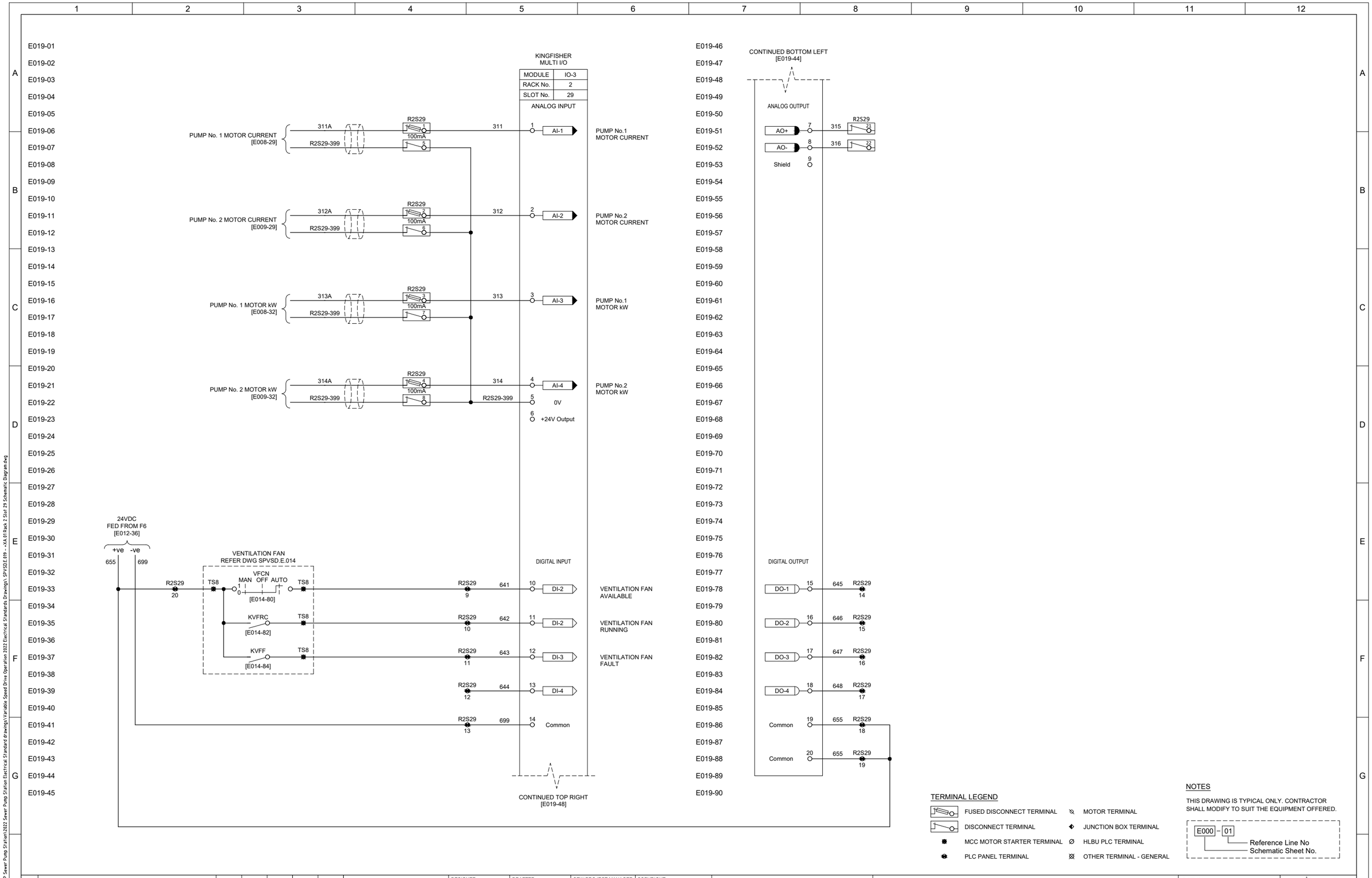

TERMINAL LEGEND

- FUSED DISCONNECT TERMINAL
- DISCONNECT TERMINAL
- MCC MOTOR STARTER TERMINAL
- PLC PANEL TERMINAL
- MOTOR TERMINAL
- JUNCTION BOX TERMINAL
- HLBU PLC TERMINAL
- OTHER TERMINAL - GENERAL

NOTES

THIS DRAWING IS TYPICAL ONLY. CONTRACTOR SHALL MODIFY TO SUIT THE EQUIPMENT OFFERED.

E000 - 01
Reference Line No
Schematic Sheet No.

REV	DESCRIPTION	JOB No	DRAFTER	DES. REVIEW	PM. APP'D	DATE
0	REDRAW 2022		M.L.			15.03.22

VENDOR DRAWING No:

DESIGNER | DRAFTER M.LIM 2022 | SEW PROJECT MANAGER
DESIGN REVIEW | DRAFT CHECK | ASSET/ENG. MANAGER
APPROVED

COPYRIGHT
"THIS DOCUMENT IS AND SHALL REMAIN THE PROPERTY OF SOUTH EAST WATER. THIS DOCUMENT MAY ONLY BE USED FOR THE PURPOSE FOR WHICH IT WAS COMMISSIONED AND IN ACCORDANCE WITH THE TERMS OF ENGAGEMENT FOR THE COMMISSION. THIS DESIGN SHOULD NOT BE COPIED OR AMENDED WITHOUT WRITTEN PERMISSION FROM SOUTH EAST WATER. UNAUTHORISED USE OF THIS DOCUMENT IN ANY WAY IS PROHIBITED."©

South East Water
101 Wells Street, Frankston, VIC 3199 W : www.sew.com.au
T : 61 3 9552 3000 F : 61 3 9552 3001 E : info@sew.com.au

SEWER PUMP STATION
DESIGN DRAWINGS STANDARDS
+XA.01 RACK 2 SLOT 29
SCHEMATIC DIAGRAM

DATUM:
MELWAY REF:
SCALE:
SHEET SIZE: A1
SEW DRAWING NUMBER
SPVSD.E.019
0
REV
SEW JOB No:

CAD FILE NAME: C:\Michael's Backup\14. SP Sewer Pump Station\2022 Sewer Pump Station Electrical Standard drawings\Variable Speed Drive Operation 2022 Electrical Standards Drawings\ SPVSDE 019 - - XA.01 Rack 2 Slot 29 Schematic Diagram.dwg
Plotted @ 05/9/2022 11:59am by mlim

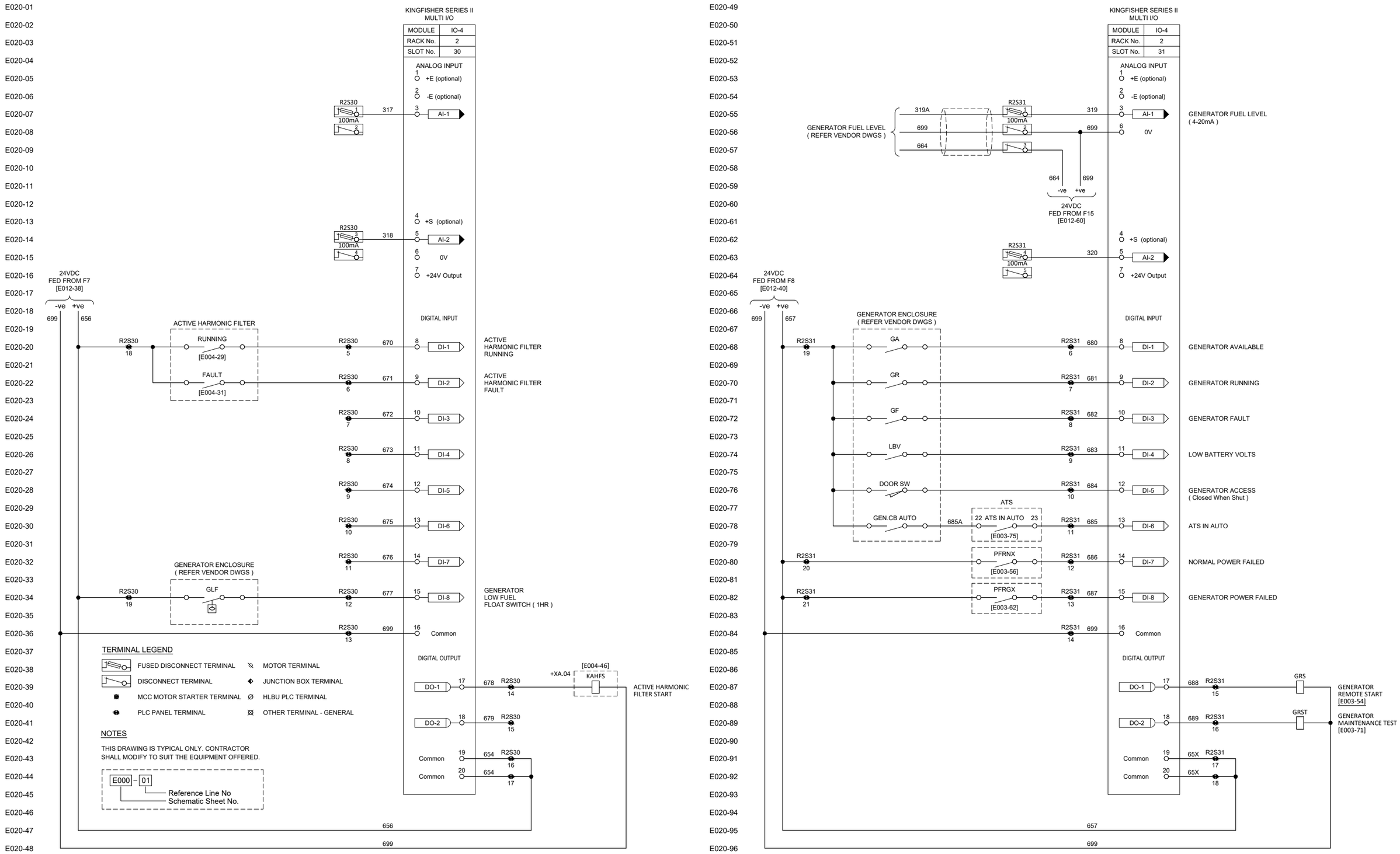

REV	DESCRIPTION	JOB No	DRAFTER	DES. REVIEW	PM. APP'D	DATE
0	REDRAW 2022		M.L.			15.03.22

VENDOR DRAWING No:

DESIGNER	DRAFTER M.LIM 2022	SEW PROJECT MANAGER
DESIGN REVIEW	DRAFT CHECK	ASSET/ENG. MANAGER
APPROVED		

COPYRIGHT
"THIS DOCUMENT IS AND SHALL REMAIN THE PROPERTY OF SOUTH EAST WATER. THIS DOCUMENT MAY ONLY BE USED FOR THE PURPOSE FOR WHICH IT WAS COMMISSIONED AND IN ACCORDANCE WITH THE TERMS OF ENGAGEMENT FOR THE COMMISSION. THIS DESIGN SHOULD NOT BE COPIED OR AMENDED WITHOUT WRITTEN PERMISSION FROM SOUTH EAST WATER. UNAUTHORISED USE OF THIS DOCUMENT IN ANY WAY IS PROHIBITED."©

South East Water
101 Wells Street, Frankston, VIC 3199 W : www.sew.com.au
T : 61 3 9552 3000 F : 61 3 9552 3001 E : info@sew.com.au

SEWER PUMP STATION DESIGN DRAWINGS STANDARDS +XA.01 RACK 2 SLOT 30 & SLOT 31 SCHEMATIC DIAGRAM

DATUM:
MELWAY REF:
SCALE:
SHEET SIZE: A1
SEW DRAWING NUMBER
SPVSD.E.020
REV 0
SEW JOB No:

CAD FILE NAME: X:\DRAWIN~1\03-ELE~1\2-MECH~1\02-INF~1\TYPICA~1\ELECTR~1\02-VAR~1\ SPVSDE.020 - +XA.01 Rack 2 Slot 30 & Slot 31 Schematic Diagram.dwg
Plotted @ 19/10/2022 6:40am by mlim

E021-01
E021-02
E021-03
E021-04
E021-05
E021-06
E021-07
E021-08
E021-09
E021-10
E021-11
E021-12
E021-13
E021-14
E021-15
E021-16
E021-17
E021-18
E021-19
E021-20
E021-21
E021-22
E021-23
E021-24
E021-25
E021-26
E021-27
E021-28
E021-29
E021-30
E021-31
E021-32
E021-33
E021-34
E021-35
E021-36
E021-37
E021-38
E021-39
E021-40
E021-41
E021-42
E021-43
E021-44
E021-45
E021-46
E021-47
E021-48

This sheet intentionally blank

E021-49
E021-50
E021-51
E021-52
E021-53
E021-54
E021-55
E021-56
E021-57
E021-58
E021-59
E021-60
E021-61
E021-62
E021-63
E021-64
E021-65
E021-66
E021-67
E021-68
E021-69
E021-70
E021-71
E021-72
E021-73
E021-74
E021-75
E021-76
E021-77
E021-78
E021-79
E021-80
E021-81
E021-82
E021-83
E021-84
E021-85
E021-86
E021-87
E021-88
E021-89
E021-90
E021-91
E021-92
E021-93
E021-94
E021-95
E021-96

REV	DESCRIPTION	JOB No	DRAFTER	DES. REVIEW	PM. APP'D	DATE
0	REDRAW 2022		M.L.			15.03.22

VENDOR DRAWING No:

DESIGNER
DRAFTER M.LIM 2022
SEW PROJECT MANAGER
DESIGN REVIEW
DRAFT CHECK
ASSET/ENG. MANAGER
APPROVED

COPYRIGHT
"THIS DOCUMENT IS AND SHALL REMAIN THE PROPERTY OF SOUTH EAST WATER. THIS DOCUMENT MAY ONLY BE USED FOR THE PURPOSE FOR WHICH IT WAS COMMISSIONED AND IN ACCORDANCE WITH THE TERMS OF ENGAGEMENT FOR THE COMMISSION. THIS DESIGN SHOULD NOT BE COPIED OR AMENDED WITHOUT WRITTEN PERMISSION FROM SOUTH EAST WATER. UNAUTHORISED USE OF THIS DOCUMENT IN ANY WAY IS PROHIBITED."©

South East Water
101 Wells Street, Frankston, VIC 3199 W : www.sew.com.au
T : 61 3 9552 3000 F : 61 3 9552 3001 E : info@sew.com.au

SEWER PUMP STATION
DESIGN DRAWINGS STANDARDS
BLANK

DATUM:
MELWAY REF:
SCALE:
SHEET SIZE: A1
SEW DRAWING NUMBER
SPVSD.E.021
0
SEW JOB No:
REV

CAD FILE NAME: C:\Michael's Backup\1L SP Sewer Pump Station\2022 Sewer Pump Station Electrical Standard drawings\Variable Speed Drive Operation 2022 Electrical Standards Drawings\ SPVSD.E.021 - Blank.dwg
Plotted @ 05/9/2022 11:59am by mlim

E022-01
E022-02
E022-03
E022-04
E022-05
E022-06
E022-07
E022-08
E022-09
E022-10
E022-11
E022-12
E022-13
E022-14
E022-15
E022-16
E022-17
E022-18
E022-19
E022-20
E022-21
E022-22
E022-23
E022-24
E022-25
E022-26
E022-27
E022-28
E022-29
E022-30
E022-31
E022-32
E022-33
E022-34
E022-35
E022-36
E022-37
E022-38
E022-39
E022-40
E022-41
E022-42
E022-43
E022-44
E022-45
E022-46
E022-47
E022-48
E022-49
E022-50
E022-51
E022-52
E022-53
E022-54
E022-55
E022-56
E022-57
E022-58
E022-59
E022-60
E022-61
E022-62
E022-63
E022-64
E022-65
E022-66
E022-67
E022-68
E022-69
E022-70
E022-71
E022-72
E022-73
E022-74
E022-75
E022-76
E022-77
E022-78
E022-79
E022-80
E022-81
E022-82
E022-83
E022-84
E022-85
E022-86
E022-87
E022-88
E022-89
E022-90
E022-91
E022-92
E022-93
E022-94
E022-95
E022-96

This sheet intentionally blank

REV	DESCRIPTION	JOB No	DRAFTER	DES. REVIEW	PM. APP'D	DATE
0	REDRAW 2022		M.L.			15.03.22

VENDOR DRAWING No:

DESIGNER
DRAFTER M.LIM 2022
SEW PROJECT MANAGER
DESIGN REVIEW
DRAFT CHECK
ASSET/ENG. MANAGER
APPROVED

COPYRIGHT
"THIS DOCUMENT IS AND SHALL REMAIN THE PROPERTY OF SOUTH EAST WATER. THIS DOCUMENT MAY ONLY BE USED FOR THE PURPOSE FOR WHICH IT WAS COMMISSIONED AND IN ACCORDANCE WITH THE TERMS OF ENGAGEMENT FOR THE COMMISSION. THIS DESIGN SHOULD NOT BE COPIED OR AMENDED WITHOUT WRITTEN PERMISSION FROM SOUTH EAST WATER. UNAUTHORISED USE OF THIS DOCUMENT IN ANY WAY IS PROHIBITED."©

South East Water
101 Wells Street, Frankston, VIC 3199 W : www.sew.com.au
T : 61 3 9552 3000 F : 61 3 9552 3001 E : info@sew.com.au

SEWER PUMP STATION
DESIGN DRAWINGS STANDARDS
BLANK

DATUM:
MELWAY REF:
SCALE:
SHEET SIZE: A1
SEW DRAWING NUMBER
SPVSD.E.022
0
SEW JOB No:
REV

CAD FILE NAME: C:\Michael's Backup\1. SP Sewer Pump Station\2022 Sewer Pump Station Electrical Standard drawings\Variable Speed Drive Operation 2022 Electrical Standards Drawings\ SPVSD.E.022 - Blank.dwg
Plotted @ 05/9/2022 11:59am by mlim

MAIN SWITCHBOARD CONSTRUCTION NOTES :

1. SWITCHBOARD TO BE CONSTRUCTED FROM MARINE GRADE ALUMINIUM MINIMUM THICKNESS 3mm (H34 5005 GRADE)
   ALL EXTERNAL WELDS SHALL BE CONTINUOUS FILLET WELDS

2. SWITCHBOARD CONSTRUCTION TO FORM 3aih TO AS/NZS 3439.1 DEGREE OF PROTECTION IP56

3. ALL INTERNAL DOORS, PANELS, ESCUTCHEONS, GEAR TRAYS FROM 3mm MILD STEEL

   ALL INTERNAL DOORS & ESCUTCHEONS TO BE FITTED WITH M6 EARTH STUDS

   ALL GEAR TRAYS TO BE REMOVABLE UNLESS OTHERWISE NOTED

4. ALL EXTERIOR DOORS TO BE FITTED WITH :

   a. HIGH DENSITY NEOPRENE SEALING STRIPS & ALUMINIUM RETAINING STRIPS
   b. 100 x 40 x 20 RECESSED WELDED HANDLES - ALUMINIUM
   c. DOOR STIFFENER
   d. DOCUMENT HOLDER 280 x 280 x 60 (AS SHOWN)

5. DOOR LOCKING :

   a. INTERNAL DOORS - MINI 'T' HANDLE KEYED TO CL001 ($\frac{1}{2}$ TURN)
   b. EXTERNAL DOORS
      (i) TOP LOCK - 100 NIGHTLATCH, ABLOY 201 CYLINDERS 5AP100 KEYING SYSTEM. M3 KEYS BY API SECURITY
      (ii) BOTTOM LOCK - 213 DEADBOLT, ABLOY 201 CYLINDERS 5AP100 KEYING SYSTEM. M3 KEYS BY API SECURITY
      (iii) TOP LOCK - 100 NIGHTLATCH, ABLOY 201 CYLINDERS VPIL KEYING SYSTEM. AA2445 KEYS SUPPLY AUTHORITY LOCK
      (iv) BOTTOM LOCK - 213 DEADBOLT, ABLOY 201 CYLINDERS VPIL KEYING SYSTEM. AA2445 KEYS SUPPLY AUTHORITY LOCK

6. DOORS HINGES : LENLOCK STAINLESS STEEL LIFT OFF TYPE. TOP HINGE PIN 5mm LONGER THAN OTHERS

7. FIT ALL INTERNAL & EXTERNAL HINGED DOORS WITH STAINLESS STEEL DOOR STAYS (BOTTOM) TO SECURE IN THE OPEN POSITION.
   ALL DOOR STAYS ARE TO BE ATTACHED TO THE SWITCHBOARD

8. MINIMUM OPENING FOR ALL EXTERNAL DOORS 120°

9. MINIMUM OPENING FOR ALL INTERNAL DOORS 105°

10. ALL EXTERNAL LOUVRES TO BE PRESSED IN THE ALUMINIUM ARE TO BE FITTED WITH 'ORNAMESH' ALUMINIUM MESHING

11. GLAND PLATES 3mm ALUMINIUM COLOUR MATCHED TO CABINET INTERNAL. NEOPRENE RUBBER SEAL TO BE FITTED ON
    LIP OF THE GLAND PLATES

12. NO SWITCHBOARD EQUIPMENT SHALL BE INSTALLED ON EXTERNAL SIDE WALLS

13. CUBICLE PLINTH - HOT DIPPED GALVANISED STEEL (75mm x 40mm x 5mm CHANNEL) TOE OUT ALL ROUND

    PROVIDE 50mm x 65mm x 5mm PLATE WELDED ON EACH END (FRONT AND BACK) FOR RETAINMENT OF LIFTING ROD, BAR OR SLING
    PROVIDE 50mm x 50mm x 5mm ANGLE CROSS BRACES
    PROVIDE 100mm x 50mm ANCHOR (WITH 14mmØ ANCHOR HOLES) WELDED TO PLINTH

14. OUTER DOORS TO BE FITTED WITH NEOPRENE RUBBER SEALS

15. "WET" SECTION TO BE FULLY WELDED AND SEALED.

FINISH :

EXTERNAL : POWDER COATED RIVERGUM GREEN G62 TO AS2700 (GLOSS)

INTERNAL : ALL INNER SURFACES, INNER DOORS, ESCUTCHEONS, GEAR TRAYS AND MOUNTING PLATES POWDER COAT COLOUR - GLOSS WHITE N14

ALL POWDER COATING SHALL BE A MINIMUM THICKNESS OF 75 MICRONS

REV	DESCRIPTION	JOB No	DRAFTER	DES. REVIEW	PM. APP'D	DATE
0	REDRAW 2022		M.L.			15.03.22

VENDOR DRAWING No:

DESIGNER | DRAFTER M.LIM 2022 | SEW PROJECT MANAGER
DESIGN REVIEW | DRAFT CHECK | ASSET/ENG. MANAGER
APPROVED

COPYRIGHT
"THIS DOCUMENT IS AND SHALL REMAIN THE PROPERTY OF SOUTH EAST WATER. THIS DOCUMENT MAY ONLY BE USED FOR THE PURPOSE FOR WHICH IT WAS COMMISSIONED AND IN ACCORDANCE WITH THE TERMS OF ENGAGEMENT FOR THE COMMISSION. THIS DESIGN SHOULD NOT BE COPIED OR AMENDED WITHOUT WRITTEN PERMISSION FROM SOUTH EAST WATER. UNAUTHORISED USE OF THIS DOCUMENT IN ANY WAY IS PROHIBITED."©

South East Water
101 Wells Street, Frankston, VIC 3199 W : www.sew.com.au
T : 61 3 9552 3000 F : 61 3 9552 3001 E : info@sew.com.au

SEWER PUMP STATION
DESIGN DRAWINGS STANDARDS
MAIN SWITCHBOARD
CONSTRUCTION NOTES

DATUM:
MELWAY REF:
SCALE:
SHEET SIZE: A1
SEW DRAWING NUMBER
SPVSD.E.030
0
SEW JOB No:
REV

CAD FILE NAME: C:\Michael's Backup\1_SP Sewer Pump Station\2022 Sewer Pump Station Electrical Standard drawings\Variable Speed Drive Operation 2022 Electrical Standards Drawings\SPVSD.E.030 - Main Switchboard Construction Notes.dwg
Plotted @ 05/9/2022 11:59am by mlim

LABEL SCHEDULE		
LABEL	ENGRAVING	DESCRIPTION
L1	DISTRIBUTION	STAINLESS STEEL LABEL (S/S RIVETS)
L2	STATION CONTROL	STAINLESS STEEL LABEL (S/S RIVETS)
L3	PUMP 1	STAINLESS STEEL LABEL (S/S RIVETS)
L4	PUMP 2	STAINLESS STEEL LABEL (S/S RIVETS)
L5	WET WELL MIXER	STAINLESS STEEL LABEL (S/S RIVETS)
L6	VENTILATION FAN	STAINLESS STEEL LABEL (S/S RIVETS)
L7		
L8		
L9	METERING	STAINLESS STEEL LABEL (S/S RIVETS)

LABEL L10

SOUTH EAST WATER LIMITED
SPxxx
xxx ADDRESS xxx
EMERGENCY PHONE 132812

DIMENSIONS : 230Wmm x 80Hmm
LABEL : STAINLESS STEEL (S/S RIVETS)
TEXT : 10mm HIGH BLACK LETTERING ENGRAVED
MOUNTING : 4 x 4mm DIAMETER MOUNTING HOLES DRILLED AS SHOWN

L11	HOSE REEL	STAINLESS STEEL LABEL (S/S RIVETS)
L12	METERING CT CHAMBER	STAINLESS STEEL LABEL (S/S RIVETS)
L13	SPARE	STAINLESS STEEL LABEL (S/S RIVETS)
L14	xxA GENERATOR CONNECTION AUTHORISED PERSONNEL ONLY	STAINLESS STEEL LABEL (S/S RIVETS)
L15	AUTOMATIC C/O SWITCH	STAINLESS STEEL LABEL (S/S RIVETS)
L16	ACTIVE HARMONIC FILTER	STAINLESS STEEL LABEL (S/S RIVETS)

LABEL SCHEDULE		
LABEL	ENGRAVING	DESCRIPTION
L27	DANGER HAZARDOUS VOLTAGE WITHIN LICENCED PERSONS ONLY	RED LABEL / WHITE TEXT FOR DRIVES AND LIVE EXPOSED BARS OR TERMINALS
L28	WARNING HAZARDOUS VOLTAGE WITHIN AUTHORISED PERSONS ONLY	RED LABEL / WHITE TEXT FOR IP2X SHARED POWERED CUBICLES
L29	HAZARD	YELLOW LABEL / BLACK LINES
L30	WARNING THIS PREMISES CONTAINS AN ELECTRICITY GENERATION SYSTEM ISOLATE SUPPLY AT GENERATOR	GREEN LABEL / WHITE TEXT FOR PANELS WITH ONSITE GENERATORS INSTALLED
L31	DANGER MULTIPLE SUPPLIES WITHIN ISOLATE ALL SUPPLIES BEFORE WORKING INSIDE THIS CUBICLE	RED LABEL / WHITE TEXT
L32	CAUTION PUMPS CAN BE REMOTELY STARTED VIA TELEMETRY SYSTEM ISOLATE BEFORE WORKING ON PUMPS OR STARTERS PUMPS MAY AUTO RESET	RED LABEL / WHITE TEXT
L33	WARNING MEGGER TEST POINT ISOLATE BEFORE TESTING OR EQUIPMENT DAMAGE WILL OCCUR	RED LABEL / WHITE TEXT
L34	TEST THIS SIDE	WHITE LABEL / BLACK TEXT
L35	STATION CONTROL +XA01	WHITE LABEL / BLACK TEXT
L36	PUMP 1 +XA02	WHITE LABEL / BLACK TEXT
L37	PUMP 2 +XA.03	WHITE LABEL / BLACK TEXT
L38	HARMONIC FILTER +XA04	WHITE LABEL / BLACK TEXT
L39	MIXER +XA05	WHITE LABEL / BLACK TEXT
L40	VENT FAN +XA06	WHITE LABEL / BLACK TEXT
L41	DISTRIBUTION +ZA	WHITE LABEL / BLACK TEXT
L42	MANUAL SPEED RESET RUNNING FAULT	WHITE LABEL / BLACK TEXT
L42A	RESET RUNNING FAULT	WHITE LABEL / BLACK TEXT
L43	PUMP 1 SELECTOR	WHITE LABEL / BLACK TEXT
L44	PUMP 2 SELECTOR	WHITE LABEL / BLACK TEXT
L45	EXTERNAL FLOOD LIGHT	WHITE LABEL / BLACK TEXT
L46	PUMP 1 HOURS RUN	WHITE LABEL / BLACK TEXT
L47	PUMP 2 HOURS RUN	WHITE LABEL / BLACK TEXT
L48	VENT FAN SELECTOR	WHITE LABEL / BLACK TEXT
L49	MIXER SELECTOR	WHITE LABEL / BLACK TEXT
L50	WET WELL SOL SELECTOR	WHITE LABEL / BLACK TEXT
L51	VESSEL SOL SELECTOR	WHITE LABEL / BLACK TEXT
L52	SPARE	WHITE LABEL / BLACK TEXT

LABEL SCHEDULE		
LABEL	ENGRAVING	DESCRIPTION
L53	MAIN SWITCH NORMAL SUPPLY	WHITE LABEL / BLACK TEXT
L54	MAIN SWITCH GENERATOR SUPPLY	WHITE LABEL / BLACK TEXT
L55	PHASE ROTATION METER	WHITE LABEL / BLACK TEXT
L56	VOLTMETER	WHITE LABEL / BLACK TEXT
L57	MEN LOCATED BEHIND DOOR	WHITE LABEL / BLACK TEXT
L58	PUMP 1 -Q04	WHITE LABEL / BLACK TEXT
L59	PUMP 2 -Q05	WHITE LABEL / BLACK TEXT
L60	DIST. PHASE FAILURE -Q07	WHITE LABEL / BLACK TEXT
L61	SURGE ARRESTOR -Q08	WHITE LABEL / BLACK TEXT
L62	STATION CONTROL -Q09	WHITE LABEL / BLACK TEXT
L63	HLBU PLC -Q10	WHITE LABEL / BLACK TEXT
L64	CUBICLE LIGHTS -Q11	WHITE LABEL / BLACK TEXT
L65	HEATER & FAN -Q12	WHITE LABEL / BLACK TEXT
L66	GPOs -Q13	WHITE LABEL / BLACK TEXT
L67	FLOOD LIGHT -Q14	WHITE LABEL / BLACK TEXT
L68	WET WELL MIXER -Q15	WHITE LABEL / BLACK TEXT
L69	VENTILATION FAN -Q16	WHITE LABEL / BLACK TEXT
L70	HARMONIC FILTER -Q06	WHITE LABEL / BLACK TEXT
L71	AMMETER	WHITE LABEL / BLACK TEXT
L72	ANTI-CONDENSATION HEATER	WHITE LABEL / BLACK TEXT
L73	TRANSFORMER 240VAC / 24VAC	WHITE LABEL / BLACK TEXT
L74	THERMOSTAT	WHITE LABEL / BLACK TEXT
L75	NEUTRAL	WHITE LABEL / BLACK TEXT
L76	EARTH	WHITE LABEL / BLACK TEXT
L77	PS1	WHITE LABEL / BLACK TEXT
L78	UPS1	WHITE LABEL / BLACK TEXT
L79	PS2	WHITE LABEL / BLACK TEXT
L80	PS3	WHITE LABEL / BLACK TEXT
L81	RACK 1	WHITE LABEL / BLACK TEXT
L82	RACK 2	WHITE LABEL / BLACK TEXT

LABEL SCHEDULE		
LABEL	ENGRAVING	DESCRIPTION
L83	MAINS	WHITE LABEL / BLACK TEXT
L84	OFF	WHITE LABEL / BLACK TEXT
L85	GENERATOR	WHITE LABEL / BLACK TEXT
L86	SURGE ARRESTOR	WHITE LABEL / BLACK TEXT
L87	DISTRIBUTION SUPPLY PHASE FAILURE	WHITE LABEL / BLACK TEXT
L88	NORMAL SUPPLY PHASE FAILURE	WHITE LABEL / BLACK TEXT
L89	MODEM	WHITE LABEL / BLACK TEXT
L90	HLBU PLC	WHITE LABEL / BLACK TEXT
L91	STATION FLOW	WHITE LABEL / BLACK TEXT
L92	DETENTION TANK 1 LEVEL	WHITE LABEL / BLACK TEXT
L93	AUTOMATIC C/O SWITCH	WHITE LABEL / BLACK TEXT
L94	MAINS	WHITE LABEL / BLACK TEXT
L95	GENERATOR	WHITE LABEL / BLACK TEXT
L96	CT CHAMBER	WHITE LABEL / BLACK TEXT
L97	IVE INTERFACE UNIT	WHITE LABEL / BLACK TEXT
L98	ACP CONTROL PLATE	WHITE LABEL / BLACK TEXT
L99	GENERATOR SUPPLY PHASE FAILURE	WHITE LABEL / BLACK TEXT
L100	ACTIVE HARMONIC FILTER CT's	WHITE LABEL / BLACK TEXT
L101	SIGNAL ISOLATOR	WHITE LABEL / BLACK TEXT

L150	ALARM RESET	PLC FAILURE	STATION UNDER REMOTE	HIGH LEVEL PUMP OPERATED	HIGH LEVEL BACKUP PUMP OPERATED	WHITE LABEL / BLACK TEXT

NOTES :

1. ALL EXTERNAL LABELS TO STAINLESS STEEL FIXED WITH STAINLESS STEEL RIVETS SEALED WITH SILICONE ADHESIVE.

REV	DESCRIPTION	JOB No	DRAFTER	DES. REVIEW	PM. APP'D	DATE
1	MINOR REVISION		M.L.			03.10.22
0	REDRAW 2022		M.L.			15.03.22

VENDOR DRAWING No:

DESIGNER	DRAFTER M.LIM 2022	SEW PROJECT MANAGER
DESIGN REVIEW	DRAFT CHECK	ASSET/ENG. MANAGER
APPROVED		

COPYRIGHT
"THIS DOCUMENT IS AND SHALL REMAIN THE PROPERTY OF SOUTH EAST WATER. THIS DOCUMENT MAY ONLY BE USED FOR THE PURPOSE FOR WHICH IT WAS COMMISSIONED AND IN ACCORDANCE WITH THE TERMS OF ENGAGEMENT FOR THE COMMISSION. THIS DESIGN SHOULD NOT BE COPIED OR AMENDED WITHOUT WRITTEN PERMISSION FROM SOUTH EAST WATER. UNAUTHORISED USE OF THIS DOCUMENT IN ANY WAY IS PROHIBITED."©

South East Water
101 Wells Street, Frankston, VIC 3199 W : www.sew.com.au
T : 61 3 9552 3000 F : 61 3 9552 3001 E : info@sew.com.au

SEWER PUMP STATION
DESIGN DRAWINGS STANDARDS
MAIN SWITCHBOARD
LABEL SCHEDULE

DATUM:
MELWAY REF:
SCALE:
SHEET SIZE: A1
SEW DRAWING NUMBER
SPVSD.E.031
1
SEW JOB No:
REV

CAD FILE NAME: X:\DRAWIN~1\03-ELE~1\2-MECH~1\02-INF~1\TYPICA~1\ELECTR~1\02-VAR~1\SPVSDE031 - Main Switchboard Label Schedule.dwg

Plotted @ 11/10/2022 6:11am by mlim

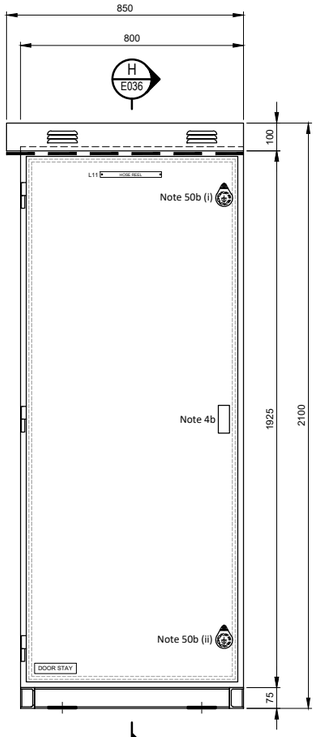

HOSE REEL CABINET - FRONT ELEVATION

(DOOR ON)

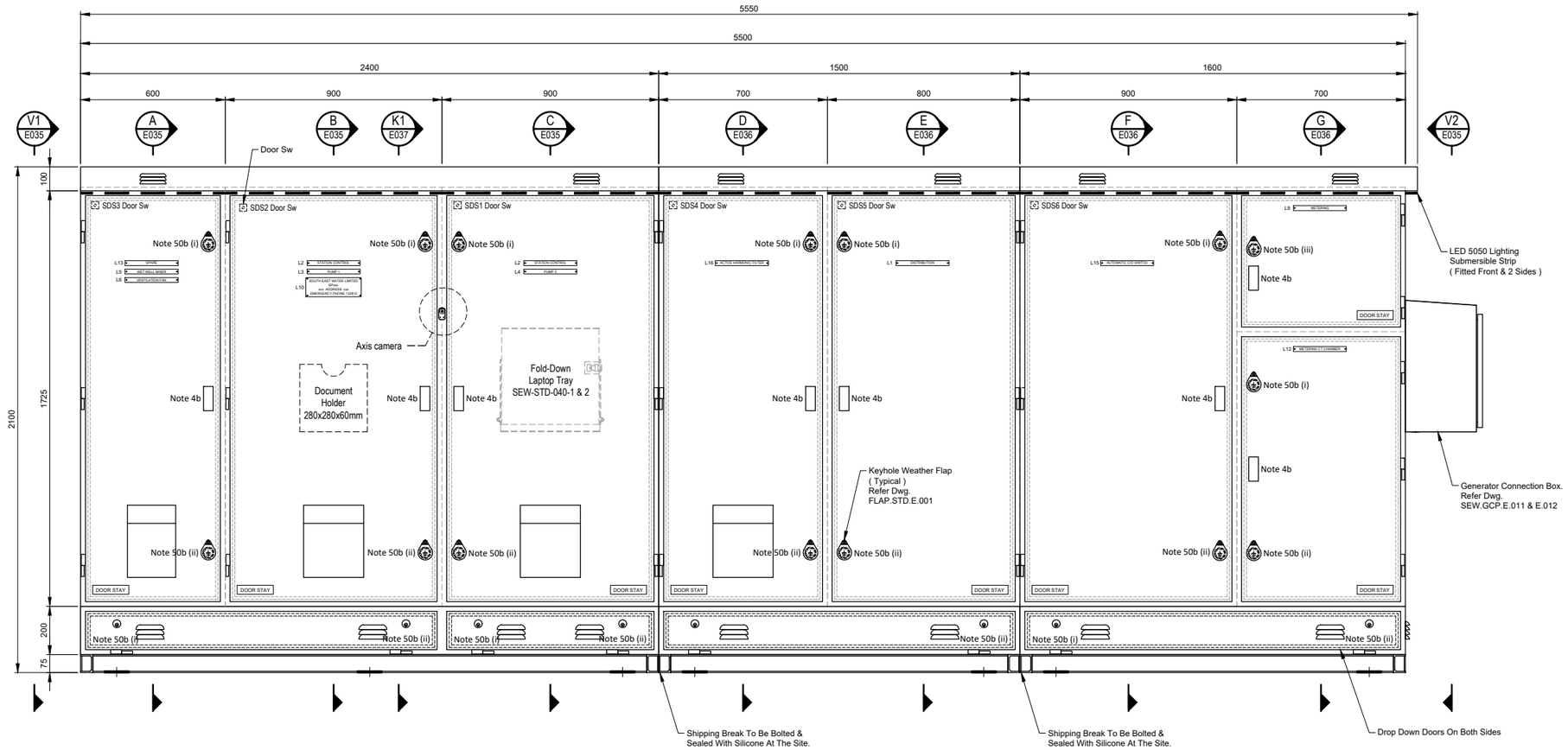

MAIN SWITCHBOARD - FRONT ELEVATION

(DOORS ON)

NOTES :

1. SWITCHBOARD CONSTRUCTION TO COMPLY WITH AS61439

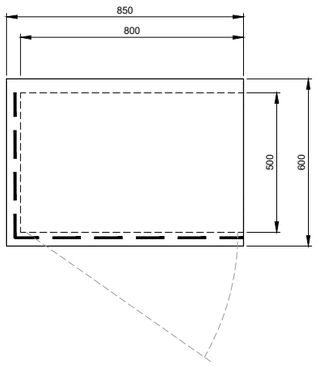

HOSE REEL CABINET - PLAN VIEW

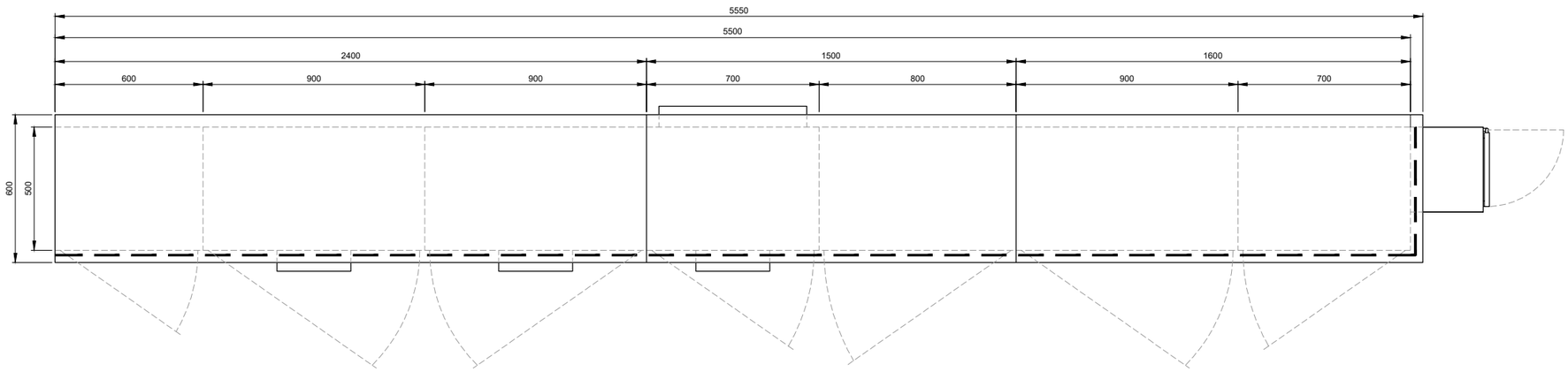

MAIN SWITCHBOARD - PLAN VIEW

NOTES

THIS DRAWING IS TYPICAL ONLY. CONTRACTOR SHALL MODIFY TO SUIT THE EQUIPMENT OFFERED.

REV	DESCRIPTION	JOB No	DRAFTER	DES. REVIEW	PM. APP'D	DATE
1	MINOR REVISION		M.L.			03.10.22
0	REDRAW 2022		M.L.			15.03.22

VENDOR DRAWING No:

DESIGNER	DRAFTER M.LIM 2022	SEW PROJECT MANAGER
DESIGN REVIEW	DRAFT CHECK	ASSET/ENG. MANAGER
APPROVED		

COPYRIGHT
"THIS DOCUMENT IS AND SHALL REMAIN THE PROPERTY OF SOUTH EAST WATER. THIS DOCUMENT MAY ONLY BE USED FOR THE PURPOSE FOR WHICH IT WAS COMMISSIONED AND IN ACCORDANCE WITH THE TERMS OF ENGAGEMENT FOR THE COMMISSION. THIS DESIGN SHOULD NOT BE COPIED OR AMENDED WITHOUT WRITTEN PERMISSION FROM SOUTH EAST WATER. UNAUTHORISED USE OF THIS DOCUMENT IN ANY WAY IS PROHIBITED."©

South East Water
101 Wells Street, Frankston, VIC 3199 W : www.sew.com.au
T : 61 3 9552 3000 F : 61 3 9552 3001 E : info@sew.com.au

SEWER PUMP STATION
DESIGN DRAWINGS STANDARDS
MAIN SWITCHBOARD GENERAL ARRANGEMENT
SHEET 1 OF 11

DATUM:
MELWAY REF:
SCALE:
SHEET SIZE: A1
SEW DRAWING NUMBER
SPVSD.E.032
SEW JOB No:
REV 1

CAD FILE NAME: X:\DRAWIN~1\V3-ELE~1\23391~1MC\026ED1~1NF\14B69~1SPS\2022SE~1\VARIAB~1\SPVSD.E032 - Main Switchboard General Arrangement Sht1 of 11.dwg
Plotted @ 03/10/2022 2:23pm by mlim

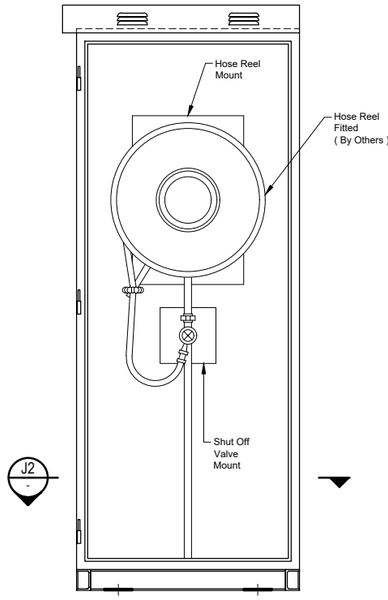

HOSE REEL CABINET - FRONT ELEVATION

(DOOR REMOVED)

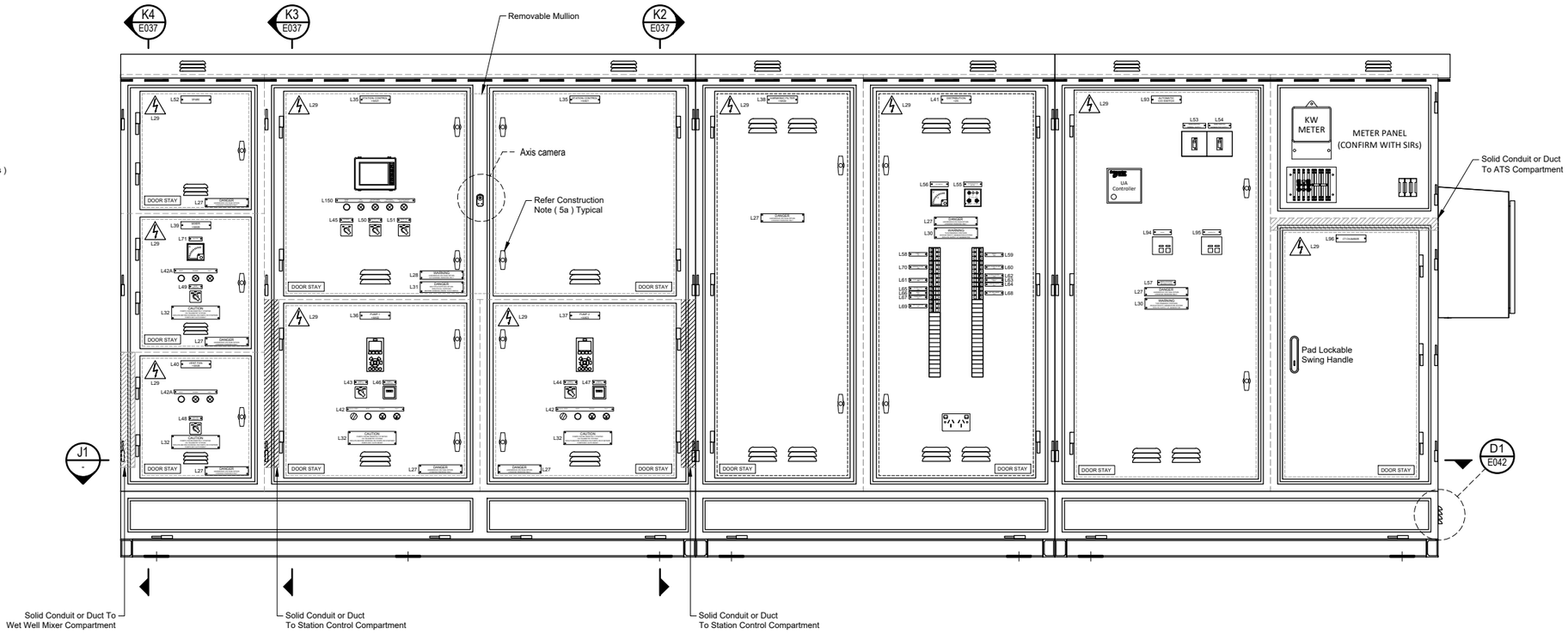

MAIN SWITCHBOARD - FRONT ELEVATION

(OUTER DOORS REMOVED)

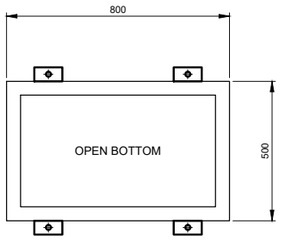

SECTION J2 -

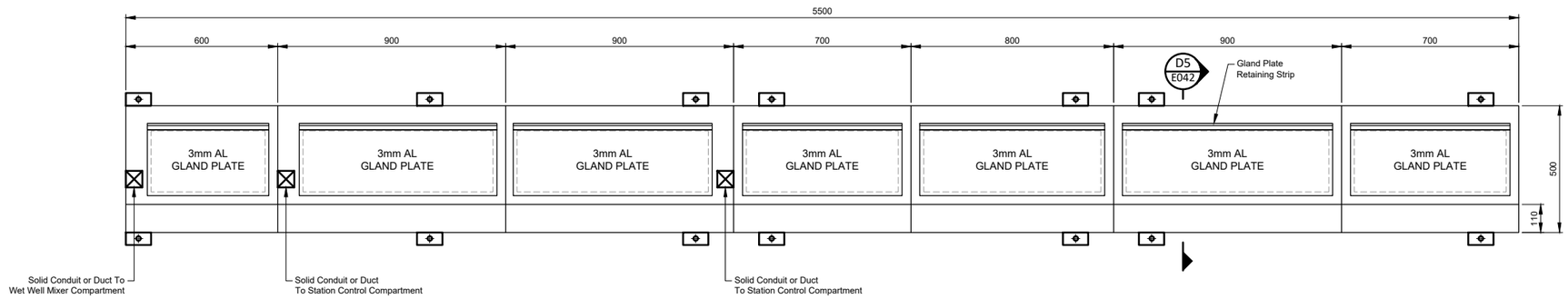

SECTION J1 -

NOTES

THIS DRAWING IS TYPICAL ONLY. CONTRACTOR SHALL MODIFY TO SUIT THE EQUIPMENT OFFERED.

REV	DESCRIPTION	JOB No	DRAFTER	DES. REVIEW	PM. APP'D	DATE
1	MINOR REVISION		M.L.			03.10.22
0	REDRAW 2022		M.L.			15.03.22

VENDOR DRAWING No:

DESIGNER	DRAFTER M.LIM 2022	SEW PROJECT MANAGER
DESIGN REVIEW	DRAFT CHECK	ASSET/ENG. MANAGER
APPROVED		

COPYRIGHT
"THIS DOCUMENT IS AND SHALL REMAIN THE PROPERTY OF SOUTH EAST WATER. THIS DOCUMENT MAY ONLY BE USED FOR THE PURPOSE FOR WHICH IT WAS COMMISSIONED AND IN ACCORDANCE WITH THE TERMS OF ENGAGEMENT FOR THE COMMISSION. THIS DESIGN SHOULD NOT BE COPIED OR AMENDED WITHOUT WRITTEN PERMISSION FROM SOUTH EAST WATER. UNAUTHORISED USE OF THIS DOCUMENT IN ANY WAY IS PROHIBITED."©

South East Water
101 Wells Street, Frankston, VIC 3199 W : www.sew.com.au
T : 61 3 9552 3000 F : 61 3 9552 3001 E : info@sew.com.au

SEWER PUMP STATION
DESIGN DRAWINGS STANDARDS
MAIN SWITCHBOARD GENERAL ARRANGEMENT
SHEET 2 OF 11

DATUM:	
MELWAY REF:	
SCALE:	SHEET SIZE: A1
SEW DRAWING NUMBER	
SPVSD.E.033	1
SEW JOB No:	REV

CAD FILE NAME: X:\DRAWN~1\03-ELE~1\2-MCH~1\02-NF~1\1TYPICA~1\ELECTR~1\02-VAR~1\ SPVSDE.033 - Main Switchboard General Arrangement Sht 2 of 11.dwg
Plotted @ 11/10/2022 6:12am by mlim

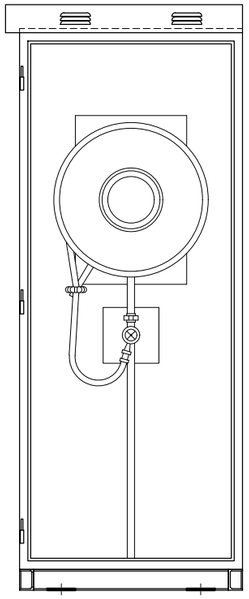

HOSE REEL CABINET - FRONT ELEVATION

(DOOR REMOVED)

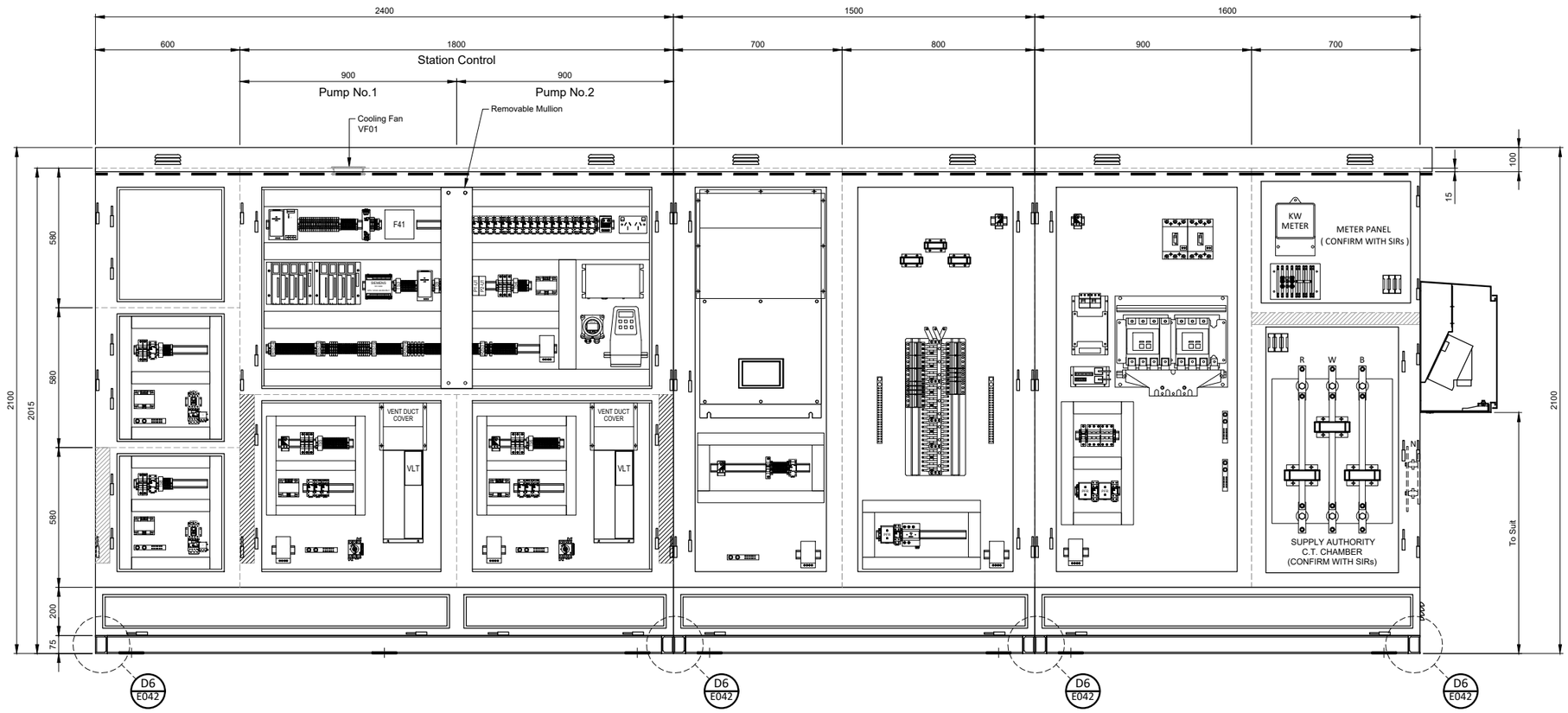

MAIN SWITCHBOARD - FRONT ELEVATION

(ALL DOORS & OUTER WALL REMOVED FOR CLARITY)

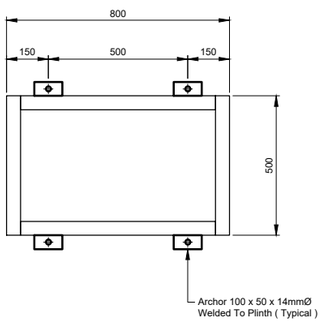

HOSE REEL CABINET PLINTH - PLAN VIEW

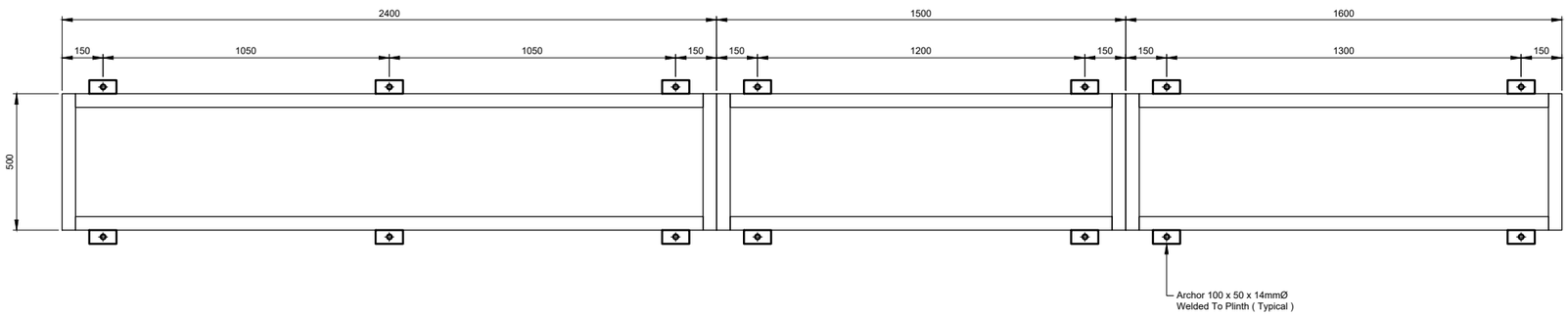

MAIN SWITCHBOARD PLINTHS - PLAN VIEW

NOTES

THIS DRAWING IS TYPICAL ONLY. CONTRACTOR SHALL MODIFY TO SUIT THE EQUIPMENT OFFERED.

REV	DESCRIPTION	JOB No	DRAFTER	DES. REVIEW	PM. APP'D	DATE
1	MINOR REVISION		M.L.			03.10.22
0	REDRAW 2022		M.L.			15.03.22

VENDOR DRAWING No:

DESIGNER	DRAFTER M.LIM 2022	SEW PROJECT MANAGER
DESIGN REVIEW	DRAFT CHECK	ASSET/ENG. MANAGER
APPROVED		

COPYRIGHT
"THIS DOCUMENT IS AND SHALL REMAIN THE PROPERTY OF SOUTH EAST WATER. THIS DOCUMENT MAY ONLY BE USED FOR THE PURPOSE FOR WHICH IT WAS COMMISSIONED AND IN ACCORDANCE WITH THE TERMS OF ENGAGEMENT FOR THE COMMISSION. THIS DESIGN SHOULD NOT BE COPIED OR AMENDED WITHOUT WRITTEN PERMISSION FROM SOUTH EAST WATER. UNAUTHORISED USE OF THIS DOCUMENT IN ANY WAY IS PROHIBITED."©

South East Water
101 Wells Street, Frankston, VIC 3199 W : www.sew.com.au
T : 61 3 9552 3000 F : 61 3 9552 3001 E : info@sew.com.au

SEWER PUMP STATION
DESIGN DRAWINGS STANDARDS
MAIN SWITCHBOARD GENERAL ARRANGEMENT
SHEET 3 OF 11

DATUM:
MELWAY REF:
SCALE:
SHEET SIZE: A1
SEW DRAWING NUMBER
SPVSD.E.034
1
REV
SEW JOB No:

CAD FILE NAME: X:\DRAWIN~1\93-ELE~1\21399~1MC\026ED1~1NF\14B69~1SPS\2022SE~1\VARIAB~1_SPVSD.E.034_ - Main Switchboard General Arrangement Sht 3 of 11.dwg
Plotted @ 03/10/2022 2:22pm by mlim

* CUBICLE DOOR LIGHTING (SPVSD.E.005)

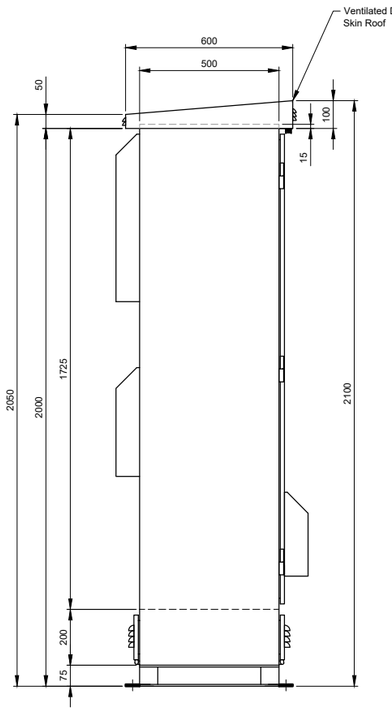

VIEW V1 E032

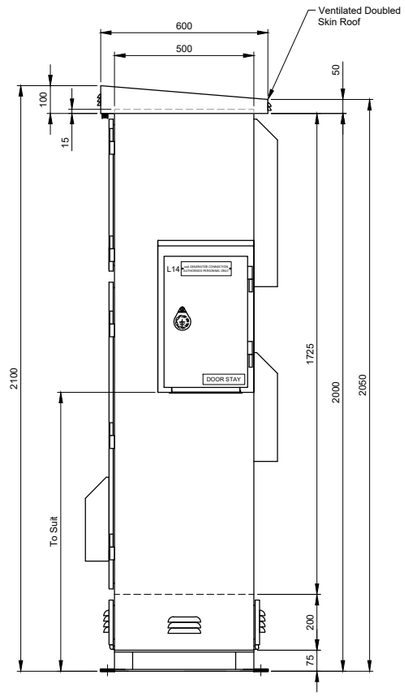

VIEW V2 E032

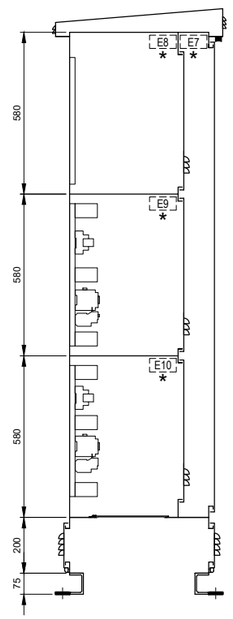

SECTION A E032

Spare
Wet Well Mixer
Ventilation fan

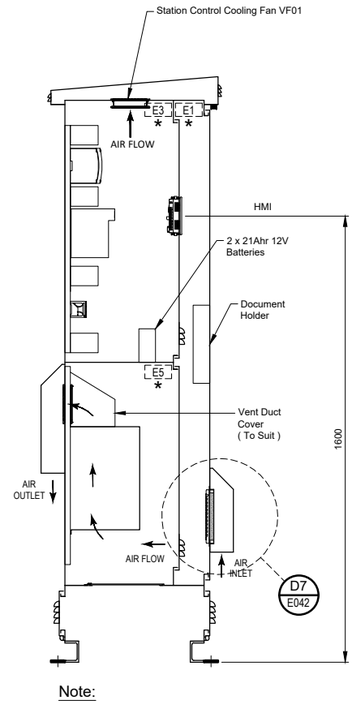

Note:

1. As Per The Manufacturer's Recommendations.

SECTION B E032

+XA.01 Station Control
+XA.02 Pump No.1

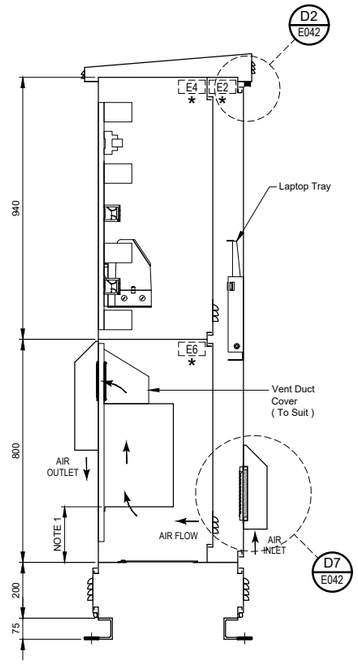

SECTION C E032

+XA.01 Station Control
+XA.03 Pump No.2

NOTES

THIS DRAWING IS TYPICAL ONLY. CONTRACTOR SHALL MODIFY TO SUIT THE EQUIPMENT OFFERED.

REV	DESCRIPTION	JOB No	DRAFTER	DES. REVIEW	PM. APP'D	DATE
1	MINOR REVISION		M.L.			03.10.22
0	REDRAW 2022		M.L.			15.03.22

VENDOR DRAWING No:

DESIGNER	DRAFTER M.LIM 2022	SEW PROJECT MANAGER
DESIGN REVIEW	DRAFT CHECK	ASSET/ENG. MANAGER
APPROVED		

COPYRIGHT
"THIS DOCUMENT IS AND SHALL REMAIN THE PROPERTY OF SOUTH EAST WATER. THIS DOCUMENT MAY ONLY BE USED FOR THE PURPOSE FOR WHICH IT WAS COMMISSIONED AND IN ACCORDANCE WITH THE TERMS OF ENGAGEMENT FOR THE COMMISSION. THIS DESIGN SHOULD NOT BE COPIED OR AMENDED WITHOUT WRITTEN PERMISSION FROM SOUTH EAST WATER. UNAUTHORISED USE OF THIS DOCUMENT IN ANY WAY IS PROHIBITED." ©

South East Water
101 Wells Street, Frankston, VIC 3199 W : www.sew.com.au
T : 61 3 9552 3000 F : 61 3 9552 3001 E : info@sew.com.au

SEWER PUMP STATION
DESIGN DRAWINGS STANDARDS
MAIN SWITCHBOARD GENERAL ARRANGEMENT
SHEET 4 OF 11

DATUM:
MELWAY REF:
SCALE:
SHEET SIZE: A1
SEW DRAWING NUMBER
SPVSD.E.035
SEW JOB No:
REV 1

CAD FILE NAME: X:\DRAWIN~1\03-ELE~1\2319-1MECVD26ED1-1NPLTA-B69-1SPS\2022SE-1\VARIAB~1\ SPVSD.E.035 - Main Switchboard General Arrangement Sht 4 of 11.dwg
Plotted @ 03/10/2022 2:21pm by mlim

* CUBICLE DOOR LIGHTING (SPVSD.E.005)

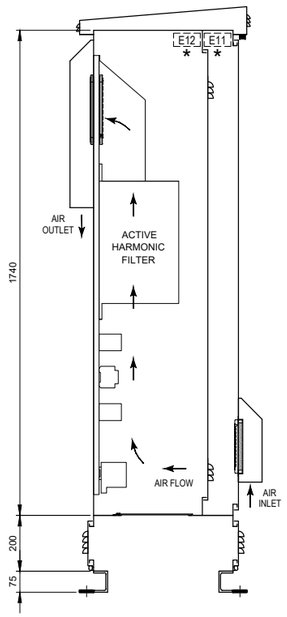

SECTION D E032
+XA.04 Harmonic Filter

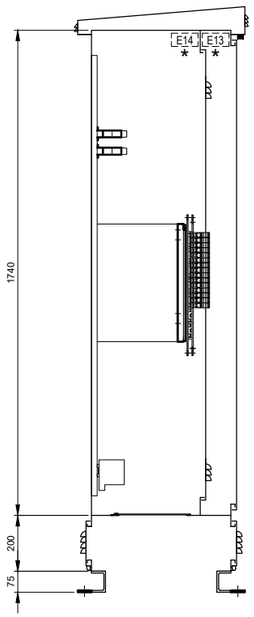

SECTION E E032
+ZA Distribution

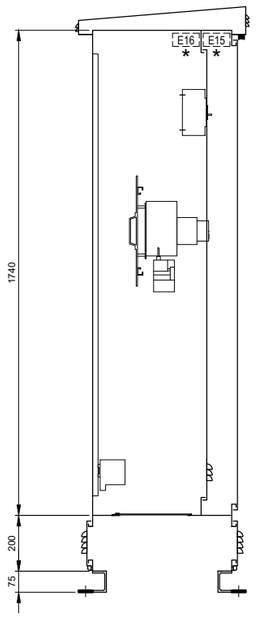

SECTION F E032
Generator ATS

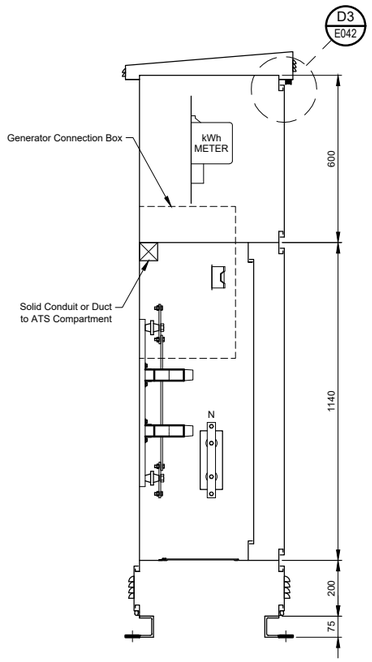

SECTION G E032
Metering Panel
C.T. Chamber

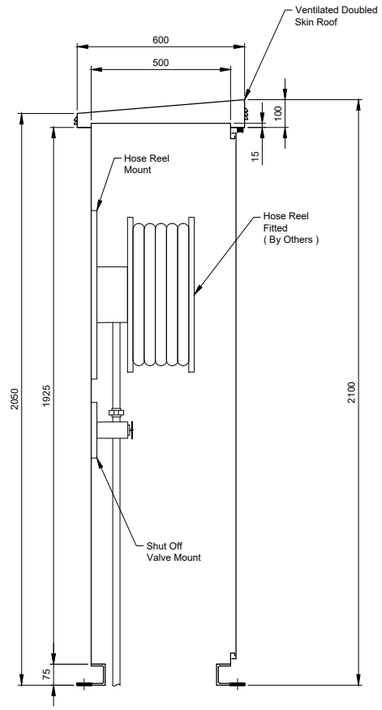

SECTION H E032
Hose Reel Cabinet

NOTES

THIS DRAWING IS TYPICAL ONLY. CONTRACTOR SHALL MODIFY TO SUIT THE EQUIPMENT OFFERED.

REV	DESCRIPTION	JOB No	DRAFTER	DES. REVIEW	PM. APP'D	DATE
1	MINOR REVISION		M.L.			03.10.22
0	REDRAW 2022		M.L.			15.03.22

VENDOR DRAWING No:

DESIGNER	DRAFTER M.LIM 2022	SEW PROJECT MANAGER
DESIGN REVIEW	DRAFT CHECK	ASSET/ENG. MANAGER
APPROVED		

COPYRIGHT
"THIS DOCUMENT IS AND SHALL REMAIN THE PROPERTY OF SOUTH EAST WATER. THIS DOCUMENT MAY ONLY BE USED FOR THE PURPOSE FOR WHICH IT WAS COMMISSIONED AND IN ACCORDANCE WITH THE TERMS OF ENGAGEMENT FOR THE COMMISSION. THIS DESIGN SHOULD NOT BE COPIED OR AMENDED WITHOUT WRITTEN PERMISSION FROM SOUTH EAST WATER. UNAUTHORISED USE OF THIS DOCUMENT IN ANY WAY IS PROHIBITED." ©

South East Water
101 Wells Street, Frankston, VIC 3199 W : www.sew.com.au
T : 61 3 9552 3000 F : 61 3 9552 3001 E : info@sew.com.au

SEWER PUMP STATION
DESIGN DRAWINGS STANDARDS
MAIN SWITCHBOARD GENERAL ARRANGEMENT
SHEET 5 OF 11

DATUM:
MELWAY REF:
SCALE:
SHEET SIZE: A1
SEW DRAWING NUMBER
SPVSD.E.036
SEW JOB No:
REV 1

CAD FILE NAME: X:\DRAWIN~1\93-ELE~1\2393-1PKC\026ED1-1NR\14\B69-1SPS\2022SE-1\VARIAB~1\ SPVSD.E.036 - Main Switchboard General Arrangement Sht 5 of 11.dwg
Plotted @ 03/10/2022 2:21pm by mlim

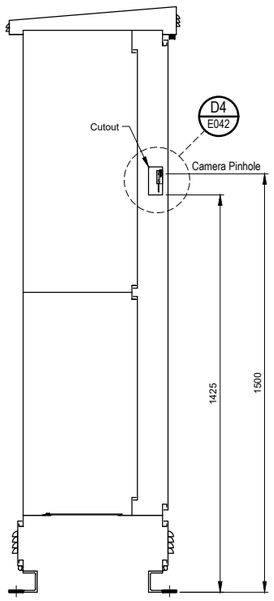

SECTION K1 E032

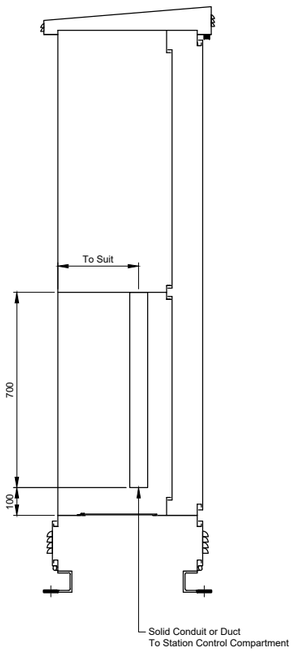

SECTION K2 E033

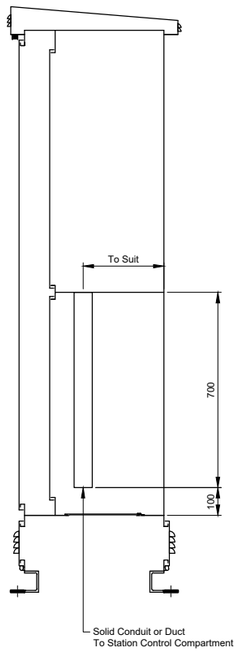

SECTION K3 E033

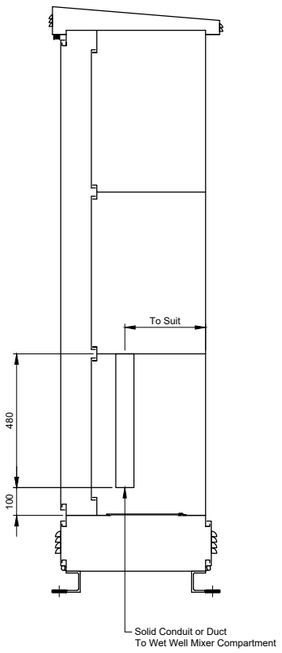

SECTION K4 E033

NOTES

THIS DRAWING IS TYPICAL ONLY. CONTRACTOR SHALL MODIFY TO SUIT THE EQUIPMENT OFFERED.

REV	DESCRIPTION	JOB No	DRAFTER	DES. REVIEW	PM. APP'D	DATE
1	MINOR REVISION		M.L.			03.10.22
0	REDRAW 2022		M.L.			15.03.22

VENDOR DRAWING No:

DESIGNER	DRAFTER M.LIM 2022	SEW PROJECT MANAGER
DESIGN REVIEW	DRAFT CHECK	ASSET/ENG. MANAGER
APPROVED		

COPYRIGHT
"THIS DOCUMENT IS AND SHALL REMAIN THE PROPERTY OF SOUTH EAST WATER. THIS DOCUMENT MAY ONLY BE USED FOR THE PURPOSE FOR WHICH IT WAS COMMISSIONED AND IN ACCORDANCE WITH THE TERMS OF ENGAGEMENT FOR THE COMMISSION. THIS DESIGN SHOULD NOT BE COPIED OR AMENDED WITHOUT WRITTEN PERMISSION FROM SOUTH EAST WATER. UNAUTHORISED USE OF THIS DOCUMENT IN ANY WAY IS PROHIBITED."©

South East Water
101 Wells Street, Frankston, VIC 3199 W : www.sew.com.au
T : 61 3 9552 3000 F : 61 3 9552 3001 E : info@sew.com.au

SEWER PUMP STATION
DESIGN DRAWINGS STANDARDS
MAIN SWITCHBOARD GENERAL ARRANGEMENT
SHEET 6 OF 11

DATUM:
MELWAY REF:
SCALE:
SHEET SIZE: A1
SEW DRAWING NUMBER
SPVSD.E.037
1
REV
SEW JOB No:

CAD FILE NAME: X:\DRAWIN~1\03-ELE~1\2139~1MC\026EDT~1NFO\%TB69~1SPS\2022SE~1\VARIAB~1\ SPVSD.E037 - Main Switchboard General Arrangement Sht 6 of 11.dwg
Plotted @ 03/10/2022 2:20pm by mlim

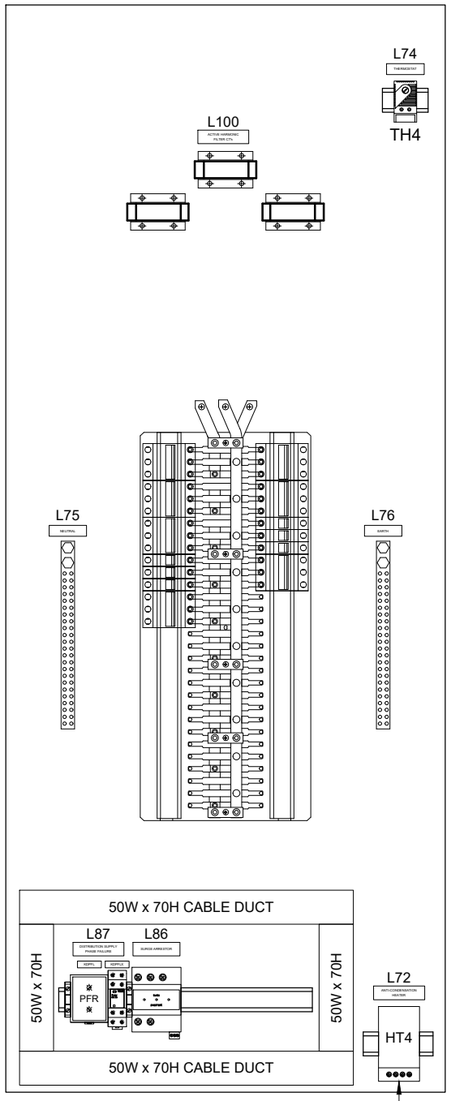

ANTI-CONDENSATION HEATER
NSYCR50WU2C ClimaSys PTC heating resistance

+ZA Power Distribution

Door & Gear Tray Details (N.T.S)

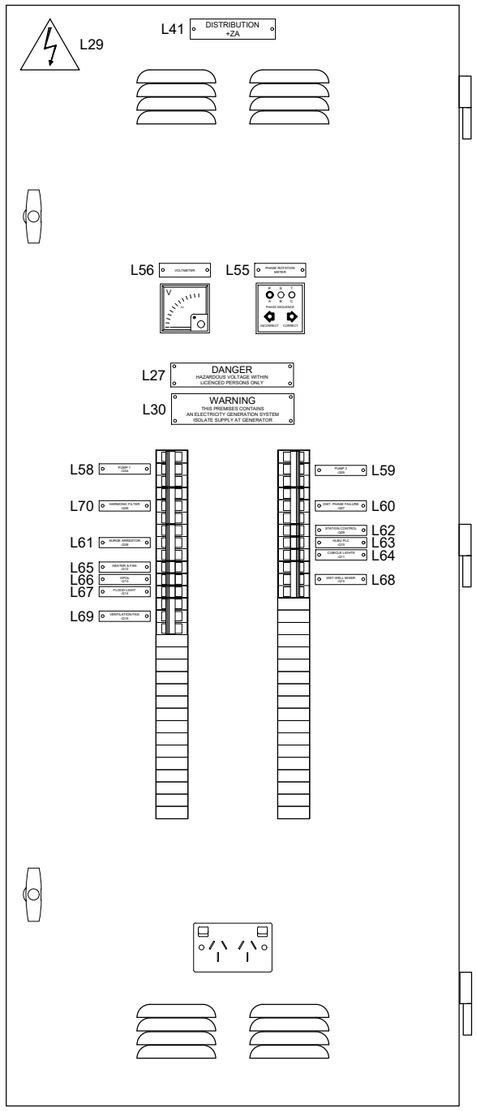

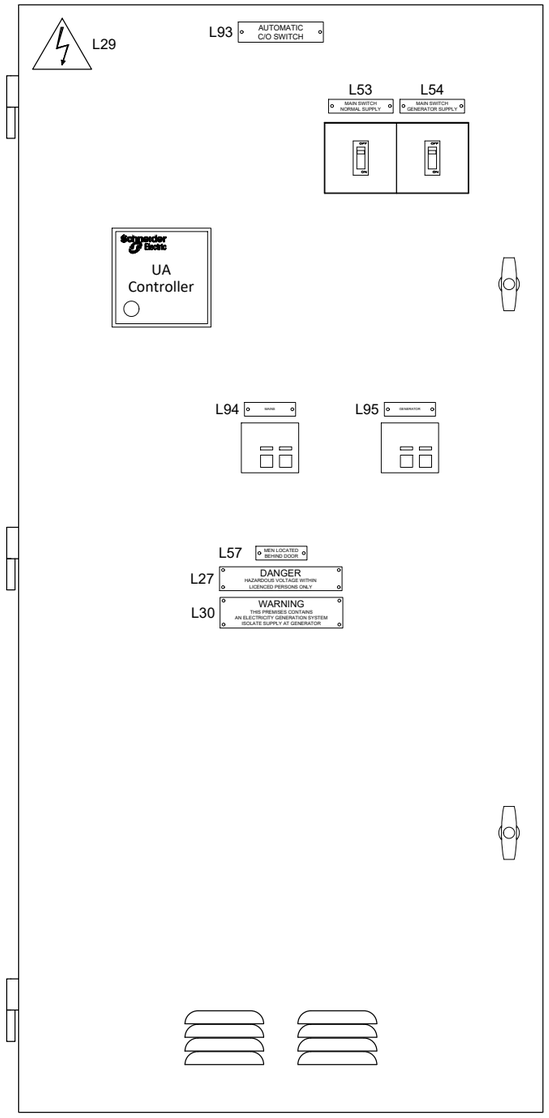

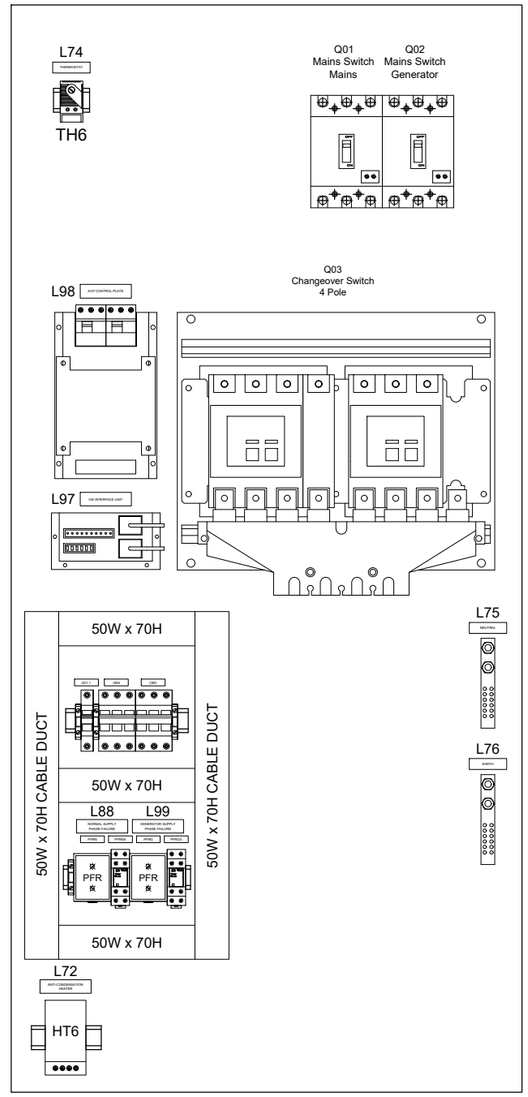

Generator Auto Transfer Switch

Door & Gear Tray Details (N.T.S)

NOTES

THIS DRAWING IS TYPICAL ONLY. CONTRACTOR SHALL MODIFY TO SUIT THE EQUIPMENT OFFERED.

REV	DESCRIPTION	JOB No	DRAFTER	DES. REVIEW	PM. APP'D	DATE
0	REDRAW 2022		M.L.			15.03.22

VENDOR DRAWING No:

DESIGNER	DRAFTER M.LIM 2022	SEW PROJECT MANAGER
DESIGN REVIEW	DRAFT CHECK	ASSET/ENG. MANAGER
APPROVED		

COPYRIGHT
"THIS DOCUMENT IS AND SHALL REMAIN THE PROPERTY OF SOUTH EAST WATER. THIS DOCUMENT MAY ONLY BE USED FOR THE PURPOSE FOR WHICH IT WAS COMMISSIONED AND IN ACCORDANCE WITH THE TERMS OF ENGAGEMENT FOR THE COMMISSION. THIS DESIGN SHOULD NOT BE COPIED OR AMENDED WITHOUT WRITTEN PERMISSION FROM SOUTH EAST WATER. UNAUTHORISED USE OF THIS DOCUMENT IN ANY WAY IS PROHIBITED."©

South East Water
101 Wells Street, Frankston, VIC 3199 W : www.sew.com.au
T : 61 3 9552 3000 F : 61 3 9552 3001 E : info@sew.com.au

SEWER PUMP STATION
DESIGN DRAWINGS STANDARDS
MAIN SWITCHBOARD GENERAL ARRANGEMENT
SHEET 7 OF 11

DATUM:
MELWAY REF:
SCALE:
SHEET SIZE: A1
SEW DRAWING NUMBER
SPVSD.E.038
SEW JOB No:
REV 0

CAD FILE NAME: C:\Michael's Backup\14. SP Sewer Pump Station\2022 Sewer Pump Station Electrical Standard drawings\Variable Speed Drive Operation 2022 Electrical Standards Drawings\ SPVSD.E.038 - Main Switchboard General Arrangement Sht 7 of 11.dwg

Plotted @ 05/9/2022 12:00pm by mlim

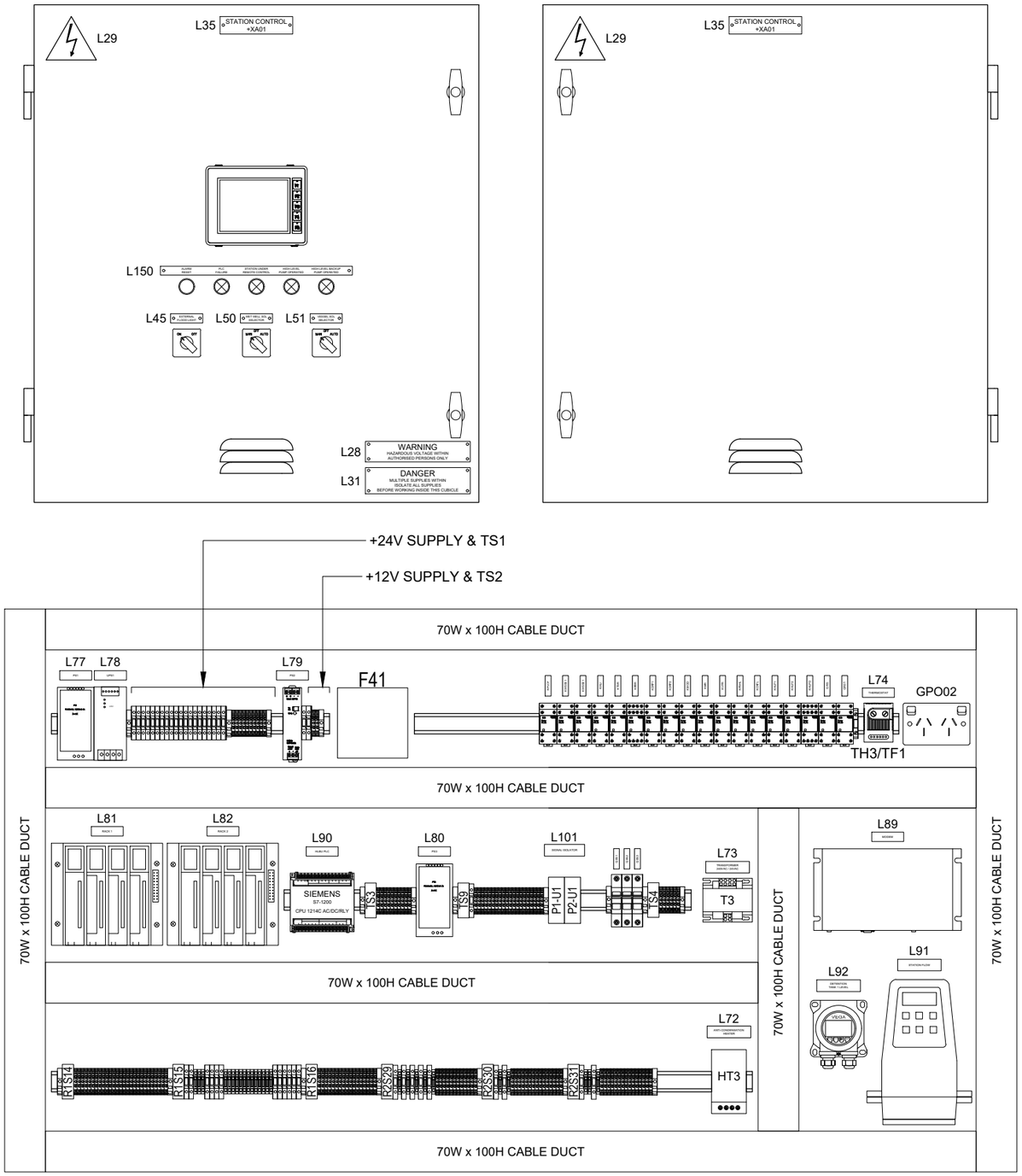

+XA.01 Station Control

Doors & Gear Tray Details (N.T.S)

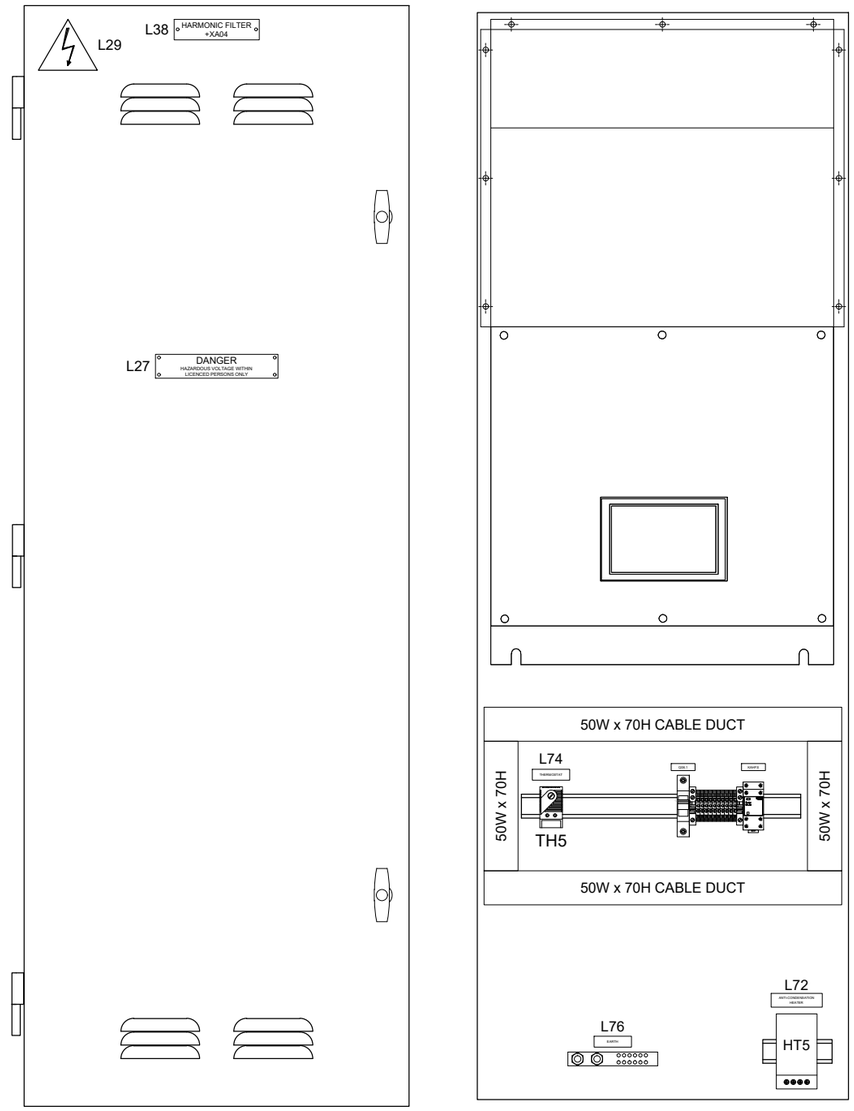

+XA.04 Active Harmonic Filter

Door & Gear Tray Details (N.T.S)

NOTES

THIS DRAWING IS TYPICAL ONLY. CONTRACTOR SHALL MODIFY TO SUIT THE EQUIPMENT OFFERED.

REV	DESCRIPTION	JOB No	DRAFTER	DES. REVIEW	PM. APP'D	DATE
1	MINOR REVISION		M.L.			03.10.22
0	REDRAW 2022		M.L.			15.03.22

VENDOR DRAWING No:

DESIGNER	DRAFTER M.LIM 2022	SEW PROJECT MANAGER
DESIGN REVIEW	DRAFT CHECK	ASSET/ENG. MANAGER
APPROVED		

COPYRIGHT
"THIS DOCUMENT IS AND SHALL REMAIN THE PROPERTY OF SOUTH EAST WATER. THIS DOCUMENT MAY ONLY BE USED FOR THE PURPOSE FOR WHICH IT WAS COMMISSIONED AND IN ACCORDANCE WITH THE TERMS OF ENGAGEMENT FOR THE COMMISSION. THIS DESIGN SHOULD NOT BE COPIED OR AMENDED WITHOUT WRITTEN PERMISSION FROM SOUTH EAST WATER. UNAUTHORISED USE OF THIS DOCUMENT IN ANY WAY IS PROHIBITED." ©

South East Water
101 Wells Street, Frankston, VIC 3199 W : www.sew.com.au
T : 61 3 9552 3000 F : 61 3 9552 3001 E : info@sew.com.au

SEWER PUMP STATION
DESIGN DRAWINGS STANDARDS
MAIN SWITCHBOARD GENERAL ARRANGEMENT
SHEET 8 OF 11

DATUM:
MELWAY REF:
SCALE:
SHEET SIZE: A1
SEW DRAWING NUMBER
SPVSD.E.039
SEW JOB No:
1
REV

CAD FILE NAME: X:\DRAWN~1\03-ELE~1\2139-1MC\026ED1~1\INF\VL\B69~1.SPS\2022SE-1\VARIAB~1\ SPVSD.E.039 - Main Switchboard General Arrangement Sht 8 of 11.dwg
Plotted @ 03/10/2022 2:20pm by mlim

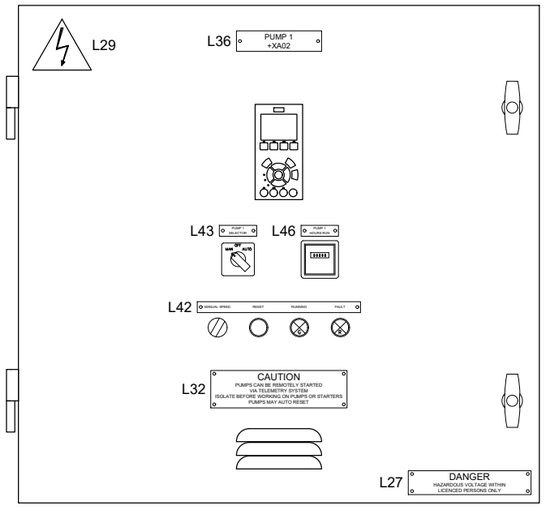

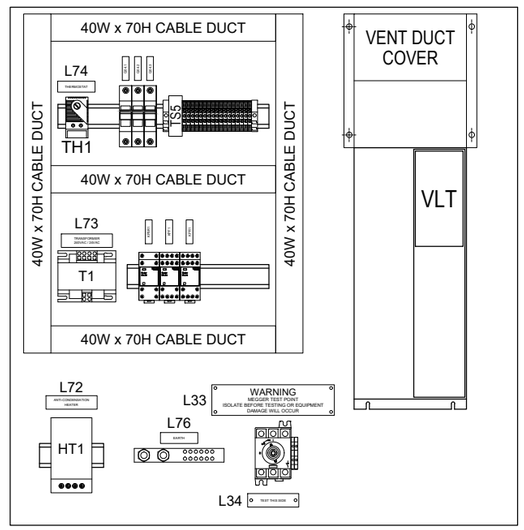

+XA.02 Pump No.1

Door & Gear Tray Details (N.T.S)

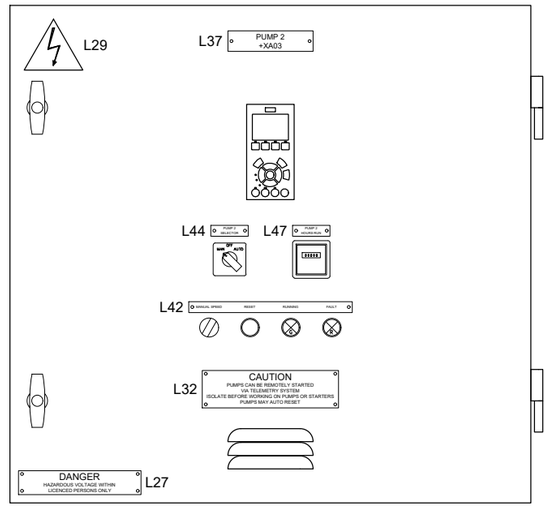

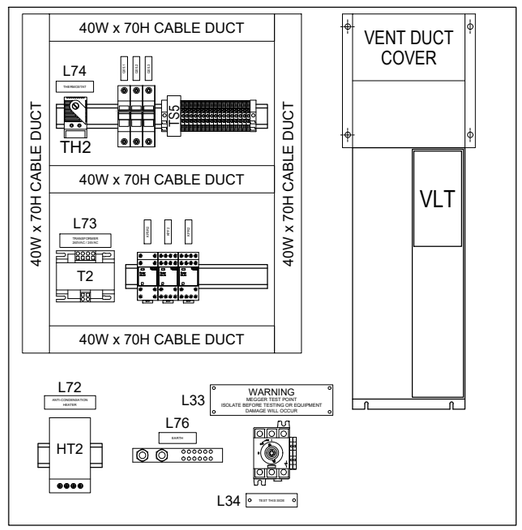

+XA.03 Pump No.2

Door & Gear Tray Details (N.T.S)

NOTES

THIS DRAWING IS TYPICAL ONLY. CONTRACTOR SHALL MODIFY TO SUIT THE EQUIPMENT OFFERED.

REV	DESCRIPTION	JOB No	DRAFTER	DES. REVIEW	PM. APP'D	DATE
1	MINOR REVISION		M.L.			03.10.22
0	REDRAW 2022		M.L.			15.03.22

VENDOR DRAWING No:

DESIGNER	DRAFTER M.LIM 2022	SEW PROJECT MANAGER
DESIGN REVIEW	DRAFT CHECK	ASSET/ENG. MANAGER
APPROVED		

COPYRIGHT
"THIS DOCUMENT IS AND SHALL REMAIN THE PROPERTY OF SOUTH EAST WATER. THIS DOCUMENT MAY ONLY BE USED FOR THE PURPOSE FOR WHICH IT WAS COMMISSIONED AND IN ACCORDANCE WITH THE TERMS OF ENGAGEMENT FOR THE COMMISSION. THIS DESIGN SHOULD NOT BE COPIED OR AMENDED WITHOUT WRITTEN PERMISSION FROM SOUTH EAST WATER. UNAUTHORISED USE OF THIS DOCUMENT IN ANY WAY IS PROHIBITED." ©

South East Water
101 Wells Street, Frankston, VIC 3199 W : www.sew.com.au
T : 61 3 9552 3000 F : 61 3 9552 3001 E : info@sew.com.au

SEWER PUMP STATION
DESIGN DRAWINGS STANDARDS
MAIN SWITCHBOARD GENERAL ARRANGEMENT
SHEET 9 OF 11

DATUM:
MELWAY REF:
SCALE:
SHEET SIZE: A1
SEW DRAWING NUMBER
SPVSD.E.040
SEW JOB No:
REV 1

CAD FILE NAME: X:\DRAWIN~1\03-ELE~1\23199~1\MEC\026ED1~1\MF\1L1B49~1SPS\2022SE~1\VARIAB~1\ SPVSD.E.040 - Main Switchboard General Arrangement Sht 9 of 11.dwg
Plotted @ 03/10/2022 2:19pm by mlim

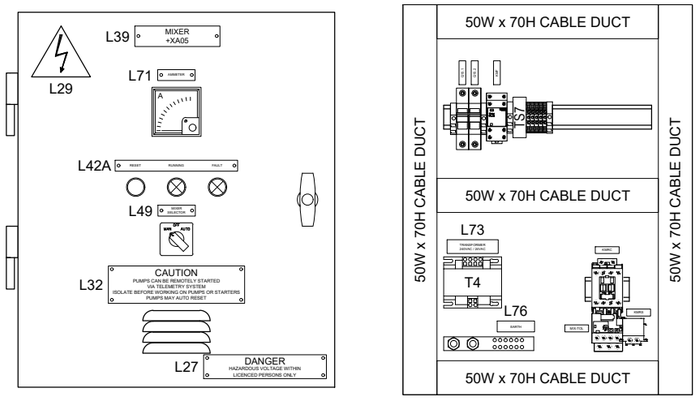

Wet Well Mixer

Door & Gear Tray Details (N.T.S)

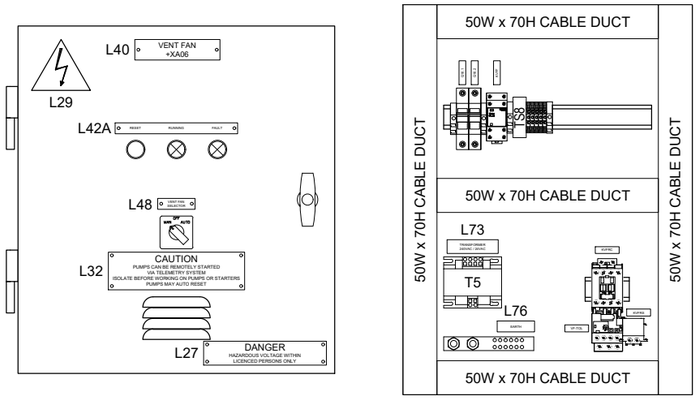

Ventilation Fan

Door & Gear Tray Details (N.T.S)

NOTES

THIS DRAWING IS TYPICAL ONLY. CONTRACTOR SHALL MODIFY TO SUIT THE EQUIPMENT OFFERED.

REV	DESCRIPTION	JOB No	DRAFTER	DES. REVIEW	PM. APP'D	DATE
1	MINOR REVISION		M.L.			03.10.22
0	REDRAW 2022		M.L.			15.03.22

VENDOR DRAWING No:

DESIGNER	DRAFTER	SEW PROJECT MANAGER
	M.LIM 2022	
DESIGN REVIEW	DRAFT CHECK	ASSET/ENG. MANAGER
APPROVED		

COPYRIGHT
"THIS DOCUMENT IS AND SHALL REMAIN THE PROPERTY OF SOUTH EAST WATER. THIS DOCUMENT MAY ONLY BE USED FOR THE PURPOSE FOR WHICH IT WAS COMMISSIONED AND IN ACCORDANCE WITH THE TERMS OF ENGAGEMENT FOR THE COMMISSION. THIS DESIGN SHOULD NOT BE COPIED OR AMENDED WITHOUT WRITTEN PERMISSION FROM SOUTH EAST WATER. UNAUTHORISED USE OF THIS DOCUMENT IN ANY WAY IS PROHIBITED."©

South East Water
101 Wells Street, Frankston, VIC 3199 W : www.sew.com.au
T : 61 3 9552 3000 F : 61 3 9552 3001 E : info@sew.com.au

SEWER PUMP STATION
DESIGN DRAWINGS STANDARDS
MAIN SWITCHBOARD GENERAL ARRANGEMENT
SHEET 10 OF 11

DATUM:	
MELWAY REF:	
SCALE:	SHEET SIZE: A1
SEW DRAWING NUMBER	
SPVSD.E.041	1
SEW JOB No:	REV

CAD FILE NAME: X:\DRAWIN~1\03-ELE~1\2-MECH~1\02-INF~1\TYPICA~1\ELECTR~1\02-VAR~1\ SPVSDE 041 - Main Switchboard General Arrangement Sht 10 of 11.dwg
Plotted @ 11/10/2022 6:13am by mlim

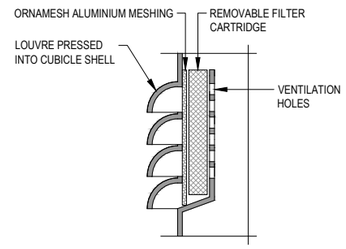

DETAIL D1 E033 — VENTILATION LOURVE (TYPICAL)
(NOT TO SCALE)

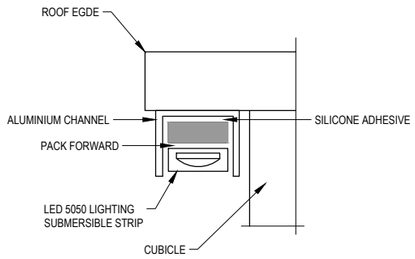

E033 D2 E035 — LED UNDER ROOF EXTERNAL LIGHTING STRIP
(NOT TO SCALE)

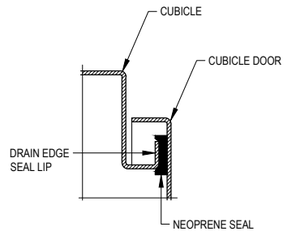

DETAIL D3 E036 — EXTERNAL DOOR SEALING (TYPICAL)
(NOT TO SCALE)

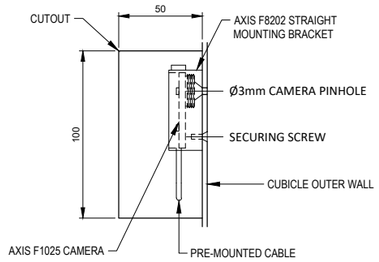

DETAIL D4 E037 — CAMERA CUTOUT
(NOT TO SCALE)

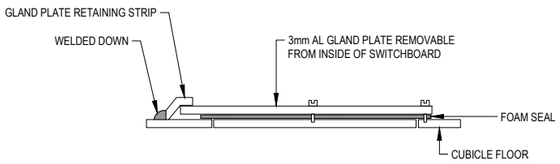

DETAIL D5 E033 — INTERNAL GLAND PLATES (TYPICAL)
(NOT TO SCALE)

GLAND PLATE SEALING.
FIT THE RAISED LIP TO THE REAR OF THE SWITCHBOARD AND THE GLAND PLATE WILL SLIDE UNDER THE LIP AND SCREW DOWN ON THE SIDE AND FRONT.
GLAND PLATE TO HAVE FOAM SEAL ON ALL SIDES.

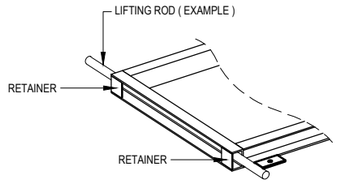

DETAIL D6 E034 — PLINTH LIFTING RETAINERS (TYPICAL)
(NOT TO SCALE)

LIFTING ROD, BAR OR SLING RETAINERS 50Wx65Hx5mm PLATE WELDED ON EACH END.

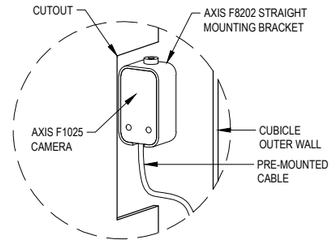

DETAIL D4 E037 — CAMERA CUTOUT
(ISOMETRIC VIEW - NTS)

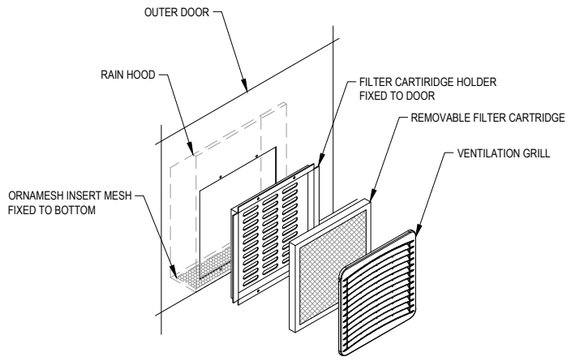

DETAIL D7 E035 — VENTILATION DETAILS (TYPICAL)
(ISOMETRIC VIEW - NTS)

NOTES

THIS DRAWING IS TYPICAL ONLY. CONTRACTOR SHALL MODIFY TO SUIT THE EQUIPMENT OFFERED.

REV	DESCRIPTION	JOB No	DRAFTER	DES. REVIEW	PM. APP'D	DATE
0	REDRAW 2022		M.L.			15.03.22

VENDOR DRAWING No:

DESIGNER	DRAFTER M.LIM 2022	SEW PROJECT MANAGER
DESIGN REVIEW	DRAFT CHECK	ASSET/ENG. MANAGER
APPROVED		

COPYRIGHT
"THIS DOCUMENT IS AND SHALL REMAIN THE PROPERTY OF SOUTH EAST WATER. THIS DOCUMENT MAY ONLY BE USED FOR THE PURPOSE FOR WHICH IT WAS COMMISSIONED AND IN ACCORDANCE WITH THE TERMS OF ENGAGEMENT FOR THE COMMISSION. THIS DESIGN SHOULD NOT BE COPIED OR AMENDED WITHOUT WRITTEN PERMISSION FROM SOUTH EAST WATER. UNAUTHORISED USE OF THIS DOCUMENT IN ANY WAY IS PROHIBITED."

South East Water
101 Wells Street, Frankston, VIC 3199 W : www.sew.com.au
T : 61 3 9552 3000 F : 61 3 9552 3001 E : info@sew.com.au

SEWER PUMP STATION
DESIGN DRAWINGS STANDARDS
MAIN SWITCHBOARD GENERAL ARRANGEMENT
SHEET 11 OF 11

DATUM:
MELWAY REF:
SCALE:
SHEET SIZE: A1
SEW DRAWING NUMBER
SPVSD.E.042
0
REV
SEW JOB No:

CAD FILE NAME: C:\Michael's Backup\14. SP Sewer Pump Station\2022 Sewer Pump Station Electrical Standard drawings\Variable Speed Drive Operation 2022 Electrical Standards Drawings\ SPVSDE.042 - Main Switchboard General Arrangement Sht 11 of 11.dwg

Plotted @ 05/9/2022 12:01pm by mlim